OWNER'S MANUAL

MANUEL DE L'UTILISATEUR
MANUAL DEL PROPIETARIO
BENUTZERHANDBUCH

TOHATSU
Feel the Wind™

KLIMASKLEP, ul. Orzechowa 3, 72-010 Przęsocin (koło Szczecina)
tel.: (91) 432-43-42, tel.: (91) 432-43-49
e-mail: kontakt@klimasklep.pl, www: www.KlimaSklep.pl

MFS 2.5B
MFS 3.5B

OB No.003-11109-4AH1

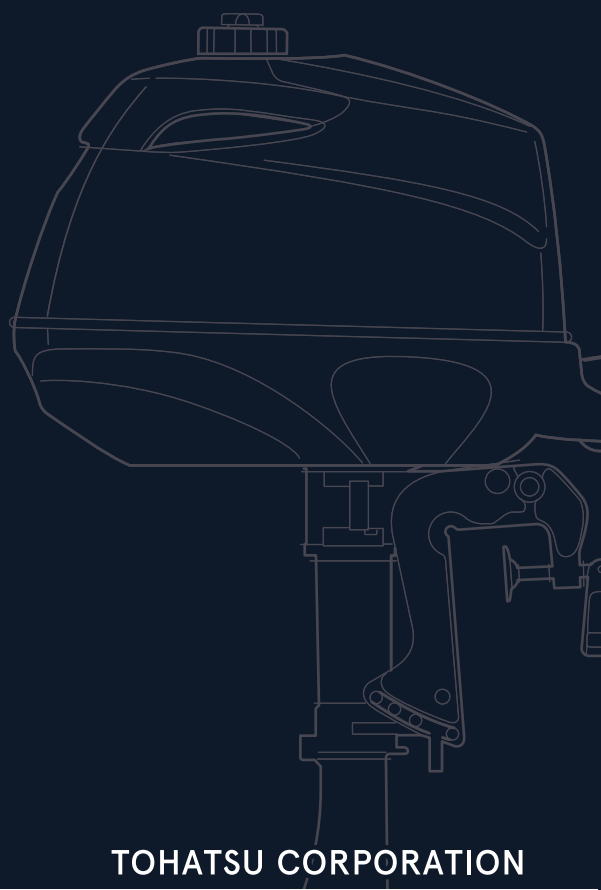

BACKS YOU UP™

TOHATSU CORPORATION

klimasklep www.klimasklep.pl (91) 432-43-42 sklep@klimasklep.pl
klimasklep www.klimasklep.pl (91) 432-43-42 sklep@klimasklep.pl
klimasklep www.klimasklep.pl (91) 432-43-42 sklep@klimasklep.pl

OWNER'S MANUAL

TOHATSU

Feel the Wind™

Original instructions

MFS 2.5B
MFS 3.5B

OB No.003-11109-4AH1

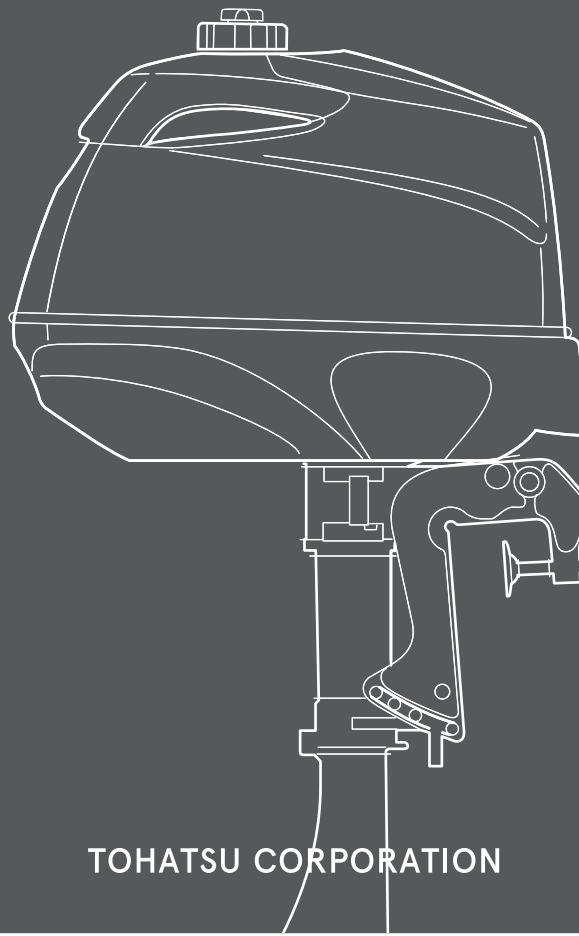

BACKS YOU UP™

TOHATSU CORPORATION

ENOM00001-0

⚠ **READ THIS MANUAL BEFORE USING THE OUTBOARD MOTOR. FAILURE TO FOLLOW THE INSTRUCTIONS AND SAFETY PRECAUTIONS IN THIS MANUAL CAN RESULT IN SERIOUS INJURY OR DEATH. KEEP THIS MANUAL IN A SAFE LOCATION FOR FUTURE REFERENCE.**

Copyright © 2018 Tohatsu Corporation. All rights reserved. No part of this manual may be reproduced or transmitted in any from or by any means without the express written permission of Tohatsu Corporation.

YOUR TOHATSU OUTBOARD MOTOR

ENOM00006-A

To You, Our Customer

Thank you for selecting a TOHATSU outboard motor. You are now the proud owner of an excellent outboard motor that will service you for many years to come.
This manual should be read in its entirety and the inspection and maintenance procedures described later in this manual should be followed carefully. Should a problem arise with the outboard motor, please follow the troubleshooting procedures listed at the end of this manual. If the problem persists, contact an authorized TOHATSU service shop or dealer.

All information in this manual is based on the latest product information available at the time of approval for printing.
Tohatsu Corporation reserves the right to make changes at any time without notice and without incurring any obligation.

Please always keep this manual together with the outboard motor as a reference to everyone who uses the outboard motor. If the outboard motor is resold, make sure the manual is passed on to the next owner.

We hope you will enjoy your outboard motor and wish you good luck in your boating adventures.

TOHATSU CORPORATION

ENOM00113-0

EC DECLARATION OF CONFORMITY (DoC)

This product conforms to certain portion of the European Parliament directive. DoC contains the following information;

- Name and Address of the manufacturer.
- Applied community directives
- Reference standard
- Description of the product. (Model name and serial number)
- Signature of the responsible person (Name / Title / Date and place of issue).

ENOM00002-0

OWNER REGISTRATION AND IDENTIFICATION

Upon purchasing this product, be sure that the WARRANTY CARD is correctly and completely filled out and mailed to the addressee noted there on. This WARRANTY CARD identifies you as the legal owner of the product and serves as your warranty registration.
TO THE EXTENT PERMITTED BY APPLICABLE LAW, YOUR OUTBOARD MOTOR WILL NOT BE COVERED BY THE APPLICABLE LIMITED WARRANTY, IF THIS PROCEDURE IS NOT FOLLOWED.

ENOM00003-0

PRE-DELIVERY CHECK

Be sure that the product has been checked by an authorized TOHATSU dealer before you take delivery.

ENOM00005-A

Serial Number

In the space below, please record the outboard motor's serial number (indicated both on the swivel bracket and on the cylinder block). The serial number will be needed when ordering parts, and when making technical or warranty inquiries.

Serial Number:

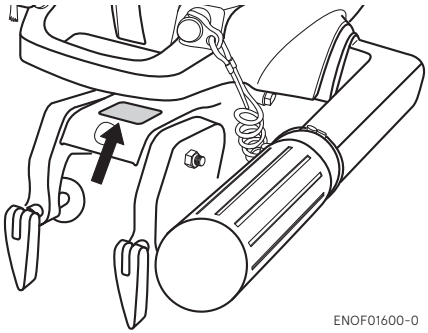

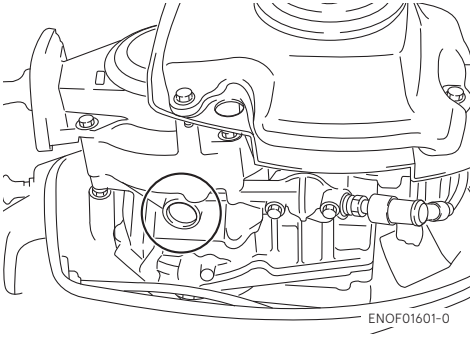

Serial Number: Date of purchase:

ENOM00007-0

NOTICE: DANGER/WARNING/CAUTION/Note

Before installing, operating or otherwise handling your outboard motor, be sure to thoroughly read and understand this Owner's Manual and carefully follow all of the instructions. Of particular importance is information preceded by the words "DANGER," "WARNING," "CAUTION," and "Note." Always pay special attention to such information to ensure safe operation of the outboard motor at all times.

ENOW00001-0

⚠ DANGER

Failure to observe will result in severe personal injury or death, and possibly property damage.

ENOW00002-0

⚠ WARNING

Failure to observe could result in severe personal injury or death, or property damage.

ENOW00003-0

⚠ CAUTION

Failure to observe could result in personal injury or property damage.

ENON00001-0

Note

This instruction provides special information to facilitate the use or maintenance of the outboard motor or to clarify important points.

CONTENTS

1. GENERAL SAFETY INFORMATION 10
2. SPECIFICATIONS 12
3. PARTS NAME 14
4. LABEL LOCATIONS 15
5. INSTALLATION 18
   1. Mounting the outboard motor on boat 18
6. PRE-OPERATING PREPARATIONS 20
   1. Fuel handling 20
   2. Fuel filling 21
   3. Engine oil recommendation 22
   4. Break-In 23
7. ENGINE OPERATION 24
   Before starting 24
   1. Fuel feeding 24
   2. Starting the engine 24
   3. Warming up the engine 28
   4. Forward, reverse, and acceleration 28
   5. Stopping the engine 30
   6. Steering 32
   7. Trim angle 32
   8. Tilt up and down 33
8. REMOVING AND CARRYING THE OUTBOARD MOTOR. 35
   1. Removing the outboard motor 35
   2. Carrying the outboard motor 35
   3. Trailering 36
9. ADJUSTMENT. 38
   1. Steering friction 38
   2. Throttle grip friction 38
10. INSPECTION AND MAINTENANCE. 39
   1. Daily Inspection 40
   2. Periodic Inspection 44
   3. Off-season storage 52
   4. Pre-season check 54
   5. Submerged outboard motor 54
   6. Cold weather precautions. 55
   7. Striking underwater object 55
   8. Auxiliary outboard motor operation 55
11. TROUBLESHOOTING 56
12. ACCESSORIES KIT 58
13. PROPELLER TABLE 59

INDEX

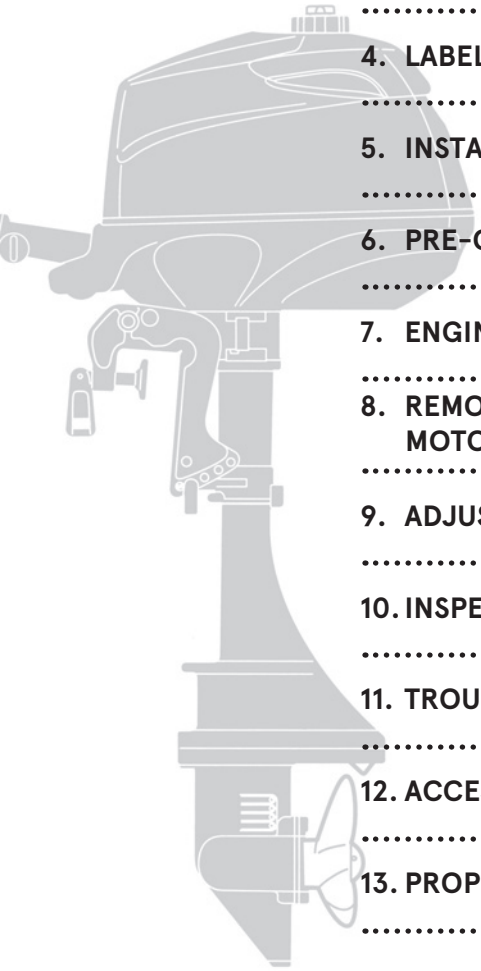

1. GENERAL SAFETY INFORMATION 1
2. SPECIFICATIONS 2
3. PARTS NAME 3
4. LABEL LOCATIONS 4
5. INSTALLATION 5
6. PRE-OPERATING PREPARATIONS 6
7. ENGINE OPERATION 7
8. REMOVING AND CARRYING THE OUTBOARD MOTOR 8
9. ADJUSTMENT 9
10. INSPECTION AND MAINTENANCE 10
11. TROUBLESHOOTING 11
12. ACCESSORIES KIT 12
13. PROPELLER TABLE 13

GENERAL SAFETY INFORMATION

ENOM00009-0

SAFE OPERATION OF BOAT

As the operator/driver of the boat, you are responsible for the safety of those aboard and those in other boat around yours, and for following local boating regulations. You should be thoroughly knowledgeable on how to correctly operate the boat, outboard motor, and accessories. To learn about the correct operation and maintenance of the outboard motor, please read through this manual carefully.

It is very difficult for a person standing or floating in the water to take evasive action should he or she see a power boat heading in his/her direction, even at a slow speed. Therefore, when your boat is in the immediate vicinity of people in the water, the outboard motor should be shifted to neutral and shut off.

ENOW00005-0

⚠ WARNING

SERIOUS INJURY IS LIKELY IF A PERSON IN THE WATER MAKES CONTACT WITH A MOVING BOAT, GEAR HOUSING, PROPELLER, OR ANY SOLID DEVICE RIGIDLY ATTACHED TO A BOAT OR GEAR HOUSING.

ENOM0008-A

EMERGENCY STOP SWITCH

The Emergency Stop Switch will stall the outboard motor when the stop switch lanyard is pulled off. This stop switch lanyard has to be attached to the operator of the outboard motor to minimize or prevent injuries from the propeller in case the operator falls overboard.

It is operator's responsibility to use the Emergency Stop Switch Lanyard.

ENOW00004-A

⚠ WARNING

Accidental activation of the Emergency Stop Switch (such as the tether being pulled out in heavy seas) could cause passengers to lose their balance and even fall overboard, or it could result in loss of power in heavy seas, strong currents, or high winds. Loss of control while mooring is another potential hazard.

To minimize accidental activation of the Emergency Stop Switch, the 500 mm (20 in.) stop switch lanyard is coiled and can extended to a full 1300 mm (51 in.).

ENOM00800-A

PERSONAL FLOATATION DEVICE

As the operator/driver and passenger of the boat, you are responsible to wear a PFD (Personal Flotation Device) while on the boat.

ENOM00010-0

SERVICING, REPLACEMENT PARTS & LUBRICANTS

We recommend that only an authorized service shop perform service or maintenance on this outboard motor. Be sure to use genuine parts, genuine lubricants, or recommended lubricants.

ENOM00011-A

MAINTENANCE

As the owner of this outboard motor, you should be acquainted with correct maintenance procedures following maintenance section of this manual (See page 39). It is the operator's responsibility to perform all safety checks and to ensure that all lubrication and maintenance instructions are complied with for safe operation. Please comply with all instructions concerning lubrication and maintenance. You should take the engine to an authorized dealer or service shop for periodic inspection at the prescribed intervals.
Correct periodic maintenance and proper care of this outboard motor will reduce the chance of problems and limit overall operating expenses.

Carbon Monoxide Poisoning Hazard

Exhaust gas contains carbon monoxide, a colorless and odorless gas which can be fatal if inhaled for any length of time.
Never start or operate the engine indoors or in any space which is not well ventilated.

Gasoline

Gasoline and its vapors are very flammable and can be explosive. Use extreme care when handling gasoline. You should be thoroughly knowledgeable on how to correctly handle gasoline by reading this manual.

SPECIFICATIONS

ENOM00810-A

MODEL FEATURE

Model		F2.5B	F3.5B
Type		MF	MF
Transom heights	S	●	●
	L	●	●
	UL		
Tiller Handle		●	●
Remote Control			
Separate fuel tank			
Integral fuel tank		●	●
Manual tilt		●	●

ENOM00811-A

MODEL NAME EXAMPLE

F 3.5 BL

F	3.5	B	L
Model description	Horse power	Product generation	Shaft length
F= Four stroke D= Two stroke DI	-	A and up	S= Short 15 in L= Long 20 in UL= Ultra long 25 in

EENOM00201-0

2.5B, 3.5B

Item	MODEL	2.5B	3.5B
Overall Length	mm (in)	690 (27.2)	
Overall Width	mm (in)	363 (14.3)	
Overall Height S·L	mm (in)	Except for USA and Canada model 1029 (40.5) 1156 (45.5)	
		For USA and Canada model 1040 (40.9) 1167 (45.9)	
Transom Height S·L	mm (in)	435 (17.1) 562 (22.1)	
Weight S·L	kg (lb)	18.4 (41) 19.4 (43)	
Output	kW (ps)	1.8 (2.5)	2.6 (3.5)
Max. Operating Range	min^{-1} (rpm)	4500–5500	5000–6000
Idle Speed in Forward Gear	min^{-1} (rpm)	1200	
Idle Speed in Neutral Gear	min^{-1} (rpm)	1300	
Engine Type		4-Stroke	
Number of Cylinder		1	
Bore × Stroke	mm (in)	55 × 36 (2.17 × 1.42)	
Piston Displacement	cm^3 (Cu in)	85.5 (5.2)	
Exhaust System		Above propeller exhaust	
Cooling System		Water cooling	
Engine Lubrication		Splashing system	
Starting System		Manual starter	
Ignition System		Ignitor	
Spark Plug		NGK DCPR6E	
Trim Position		4	
Engine Oil	mL (fl.oz.)	API SF, SG, SH, SJ or SL, SAE 10W-30/40 Approx. 300 (10)	
Gear Oil	mL (fl.oz.)	Genuine Gear Oil or API GL5, SAE #80-90, Approx. 180 (6.1)	
Fuel		Unleaded Regular Gasoline : R+M/2: 87 or higher RON: 91 or higher	
Clutch		Dog clutch system (F-N)	
Fuel Tank Capacity	L (US gal)	1.0 (0.26) Integral tank	
Gear Reduction Ratio		2.15 (13 : 28)	
Emission Control System		EM (Engine modification)	
Operator Sound Pressure (ICOMIA 39/94) dB (A)		80.1	
Hand Vibration Level (ICOMIA 38/94) m/s^2		8.9	

Remark: Specifications subject to change without notice.
Tohatsu outboard is power rated in accordance with ISO8665 (propeller shaft output).

PARTS NAME

ENOM00202-0

2.5B, 3.5B

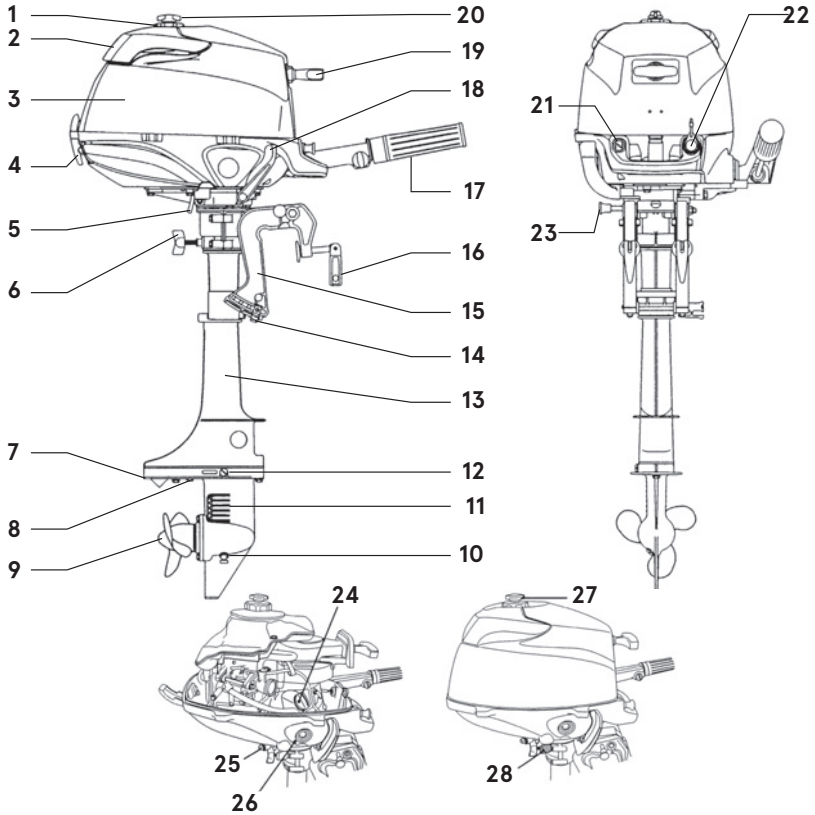

ENOF00201-0

1 Fuel Tank Cap
2 Tilt Handle
3 Top Cowl
4 Cowl Latch
5 Cooling Water Check Port
6 Steering Adjustment Screw
7 Anti Ventilation Plate
8 Anode
9 Propeller
10 Oil Plug (Lower) (Fill)
11 Water Inlet
12 Oil Plug (Upper) (Level)
13 Drive Shaft Housing
14 Thrust Rod
15 Clamp Bracket
16 Clamp Screw
17 Throttle Grip
18 Shift Lever
19 Starter Handle
20 Air Vent Screw
21 Choke Knob
22 Stop Switch
23 Tilt Stopper
24 Engine Oil Filler Cap
25 Engine Oil Drain Screw
26 Engine Oil Level Gauge
27 Air Vent Screw
28 Fuel Cock

LABEL LOCATIONS

ENOM00203-0

Warning label locations

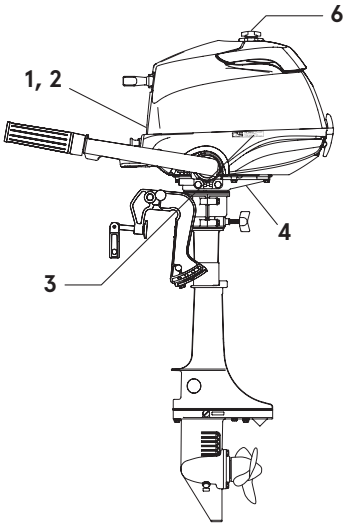

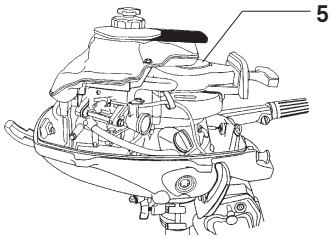

ENOF01605-1

1. Warning label urge to read the owner's manual.

ENOF00120-0

2. Warning label regarding stop switch (See page 25, 31)

ENOF00131-B

3. Warning label on position of outboard motor when setting down.

ENOF00253-0

4. Warning regarding high temperature.

3GR-76191-0

5-1. Warning regarding emergency starting (See page 26).

5-2. Warning regarding rotating object.

5-3. Warning regarding high temperature.

5-4. Warning regarding high voltage

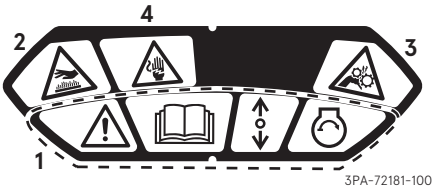

6. Warning regarding fuel tank cap (See page 21, 24)

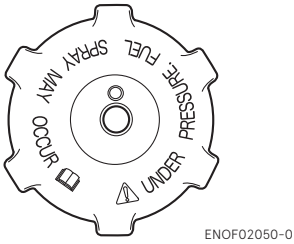

ENOM00019-B

CE label locations

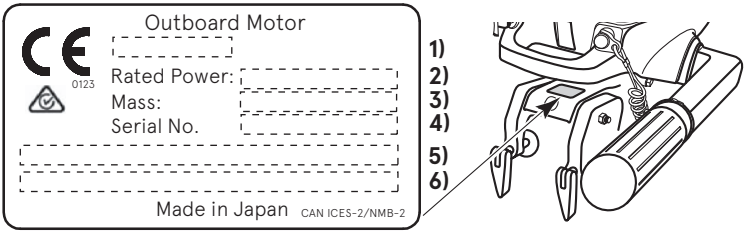

ENOF01606-1

1. Model code(Model name)
2. Rated power
3. Dry mass weight(Without propeller, with battery cable)
4. Serial No.
5. Manufacturer name
6. Manufacturer address

Description of serial number year code

Last two digits of alphabet represent production year as below.

Year Code	AG	AH	AK	BX	BA
Year of manufacture	2017	2018	2019	2020	2021

INSTALLATION

ENOM00024-B

1. Mounting the outboard motor on boat

ENOW00006-0

⚠ WARNING

Most boats are rated and certified in terms of their maximum allowable horsepower, as shown on the boat's certification plate. Do not equip your boat with an outboard motor that exceeds this limit. If in doubt, contact your dealer.
Do not operate the outboard motor until it has been securely mounted on the boat in accordance with the instructions below.

ENOW00009-0

⚠ WARNING

- **Mounting the outboard motor without following this manual can lead to unsafe conditions such as poor maneuverability, lack of control or fire.**
- **Loose clamp screws and/or mounting bolts can lead to the release or displacement of the outboard motor, possibly resulting in lost of control and/or serious personal injury. Be sure that fasteners are tightened to the specified torque (30 N·m (3.0 kgf·m) 13 ft·lb). Check the fasteners for tightness from time to time.**
- **Be sure to use outboard mounting fasteners included in the outboard motor package or their equivalents in terms of size, material, quality and strength. Tighten fasteners to the specified torque (30 N·m (3.0 kgf·m) 13 ft·lb). Test cruise to check if fasteners are tightened securely.**
- **Outboard motor mounting must be performed by trained service person(s) using lift or hoist with sufficient capacity.**

Keep the outboard motor in a vertical position when mounting.

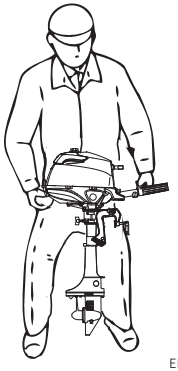

ENOF01607-0

ENOM00025-0

Position ... Above keel line

Set engine at center of boat.

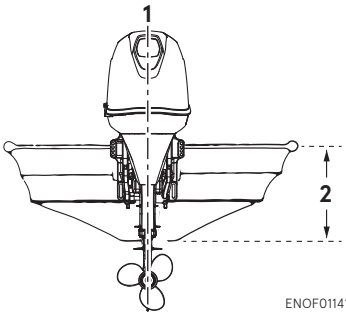

ENOF01141-0

1. Center of boat
2. Boat transom

ENOM00026-0

Transom matching

Be sure that the anti ventilation plate of the outboard motor is 30–50 mm (1.2–2 in) below the bottom of hull.
If the above condition cannot be met due to the shape of the bottom of your boat, please consult your authorized dealer.

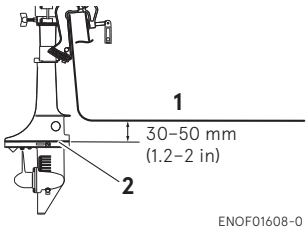

ENOF01608-0

1. Bottom of hull
2. Anti ventilation plate

ENOW00007-0

⚠ CAUTION

- **Before beginning the running test, check that the boat with maximum capacity loading floats on the water in a proper attitude. Check the position of water surface on the driveshaft housing. If the water surface is near the bottom cowling, in high waves, water may enter the engine cylinders.**
- **Incorrect outboard motor mounting height or existence of underwater object(s), such as hull bottom design, bottom surface conditions or underwater accessories, can cause water spray possibly reaching the engine through an opening of the bottom cowling during cruising. Exposing the engine to such conditions for extended periods can lead to severe engine damage.**
- **Tighten the bolts sufficiency, otherwise falling down of outboard could be happened.**

ENOM00830-A

Mounting bolts

Manual tilt type

1. To attach the outboard motor to the boat, tighten the clamp screws by turning their handles.
   Secure the outboard motor with a rope to prevent loss overboard.

ENON00002-0

Note

A rope is not included in the standard accessories.

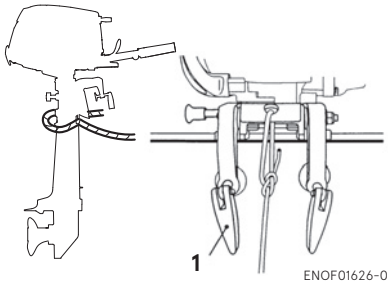

ENOF01626-0

1. Clamp screw

ENOW00945-0

⚠ CAUTION

- **Please inspect whether there is a loosening of the clamp screw or mounting bolts before departure.**
- **Loosening may cause a dangerous situation, such as loss of control.**

PRE-OPERATING PREPARATIONS

ENOM00030-A

1. Fuel handling

ENOW000017-0

⚠ CAUTION

Use of improper gasoline can damage your engine. Engine damage resulting from the use of improper gasoline is considered misuse of the engine, and damage caused thereby will not be covered under the limited warranty.

ENOM00031-A

FUEL RATING

TOHATSU engines will operate satisfactorily when using a major brand of unleaded gasoline meeting the following specifications:

USA and Canada — having a posted pump Octane Rating of 87 (R+M)/2 minimum. Premium gasoline (92 [R+M]/2 Octane) is also acceptable. Do not use leaded gasoline.

Outside USA and Canada — Use unleaded gasoline with declared octane rating of 91 RON or over. Use of premium gasoline of 98 RON is also allowed.

ENOM00032-A

GASOLINES CONTAINING ALCOHOL

The fuel system components on your TOHATSU engine will withstand up to 10% ethyl alcohol (hereinafter referred to as the "ethanol"), content in the gasoline. But even if the gasoline in your area contains ethanol less than 10%, you should be aware of certain adverse effects that can occur. Increasing the percentage of ethanol in the fuel can also worsen these adverse effects. Some of these adverse effects are caused because the ethanol in the gasoline can absorb moisture from the air, resulting in a separation of the water/ethanol from the gasoline in the fuel tank.

These may cause increased:

- Corrosion of metal parts
- Deterioration of rubber or plastic parts
- Fuel permeation through rubber fuel lines
- Starting and operating difficulties

If the use of gasoline containing alcohol is inevitable, or presence of alcohol is suspected in the gasoline, it is recommended to add a filter that has water separating capability, and check the fuel system for leaks and mechanical parts for corrosion and abnormal wear more frequently.

And, in case any of such abnormality is found, discontinue the use of such gasoline and contact our dealer immediately.

If the outboard motor will only be used infrequently, please see the remarks on fuel deterioration in the STORAGE chapter (P 78) for additional information.

ENOW00020-1

⚠ CAUTION

When operating a TOHATSU engine on gasoline containing alcohol, storage of gasoline in the fuel tank for long periods should be avoided. Long periods of storage, create unique problems. In cars, alcohol blend fuels normally are consumed before they can absorb enough moisture to cause trouble, but boats often sit idle long enough for phase separation to take place. In addition, internal corrosion may take place during

storage if alcohol has washed protective oil films from internal components.

ENOW00018-0

⚠ WARNING

Fuel leakage can cause fire or explosion, potentially leading to severe injury or loss of life. Every fuel system part should be checked periodically, and especially after long term storage, for fuel leak, change of hardness of rubber, expansion and/or corrosion of metals. In case any indication of fuel leakage or degradation of fuel part is found, replace relevant part immediately before continuing operation.

ENOM00043-C

2. Fuel filling

ENOW00019-1

⚠ WARNING

Do not fill the fuel tank over capacity. The rise of gasoline temperature may cause gasoline to expand which, may leak through air vent screw when it is open. Leaking gasoline is a dangerous fire hazard.

ENOW00028-A

⚠ WARNING

Consult an authorized dealer for details on handling gasoline, if necessary.

Gasoline and its vapors are very flammable and can be explosive.

When carrying a fuel tank containing gasoline:

- **Close the fuel tank cap and air vent screw of fuel tank cap, or gasoline vapor will be emitted through the air vent screw, creating a fire hazard.**
- **Do not smoke.**

When or before refueling:

- **Be sure to remove the static electricity charged in your body before refueling.**
- **The sparks due to static electricity may cause explosion of flammable gasoline.**
- **Stop the engine, and do not start the engine during refueling.**
- **Do not smoke.**
- **Be careful not to overfill fuel tank. Wipe up any spilled gasoline immediately.**

When or before cleaning the gasoline tank:

- **Dismount fuel tank from the boat.**
- **Place the fuel tank away from every source of ignition, such as sparks or open flames.**
- **Do the work outdoors or in a well ventilated area.**
- **Wipe off gasoline well immediately if spilled.**
-

After cleaning gasoline tank:

- **Wipe off gasoline well immediately if spilled.**
- **If the fuel tank is disassembled for cleaning, reassemble carefully. Imperfect assembly may cause a fuel leak, possibly leading to fire or explosion.**
- **Dispose aged or contaminated gasoline in accordance with local regulations.**

ENOW00029-A

⚠ WARNING

When opening fuel tank cap, be sure to follow the procedure described below. Fuel could blast out through the fuel tank cap in case the cap is loosened by using another procedure when internal pressure of fuel tank is raised by heat from sources such as sun light.

1. Before opening fuel tank cap, turn air vent screw two times counterclockwise to release air pressure in the fuel tank.

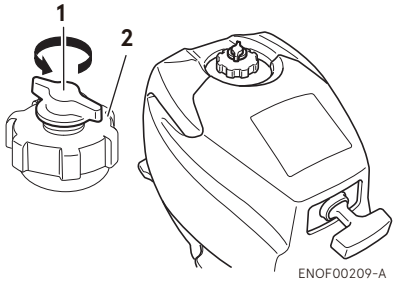

1. Air vent screw
2. Fuel tank cap

2. Open the fuel tank cap slowly.
3. Fill the fuel not to over the shown level.

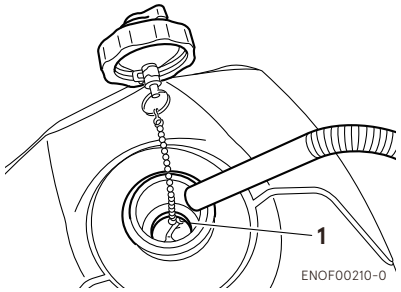

1. Full line

4. After filling the tank, close the tank cap.

ENOM00037-A

3. Engine oil recommendation

ENOW00022-A

⚠ CAUTION

The engine oil is drained for shipping from the factory. Be sure to fill the engine to the proper level before starting engine. (To properly fill the engine with oil follow the instructions, See page 45)

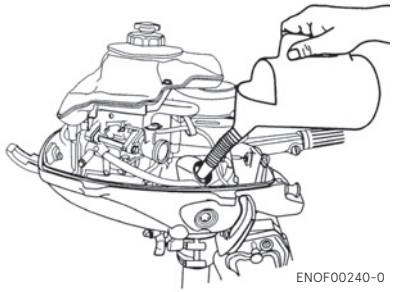

Use only high quality 4-stroke engine oil to insure performance and prolonged engine life.
The SAE oil viscosity 10W-30 or 10W-40 outboard motor engine oil is recommended.
You can also use oils that carry the API rating of SH, SJ, or SL. Select the appropriate viscosity, based on atmospheric temperature, from the chart below.

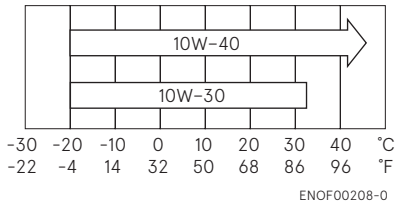

ENOW0002A-A

⚠ CAUTION

Use of engine oils that do not meet these requirements will result in reduced engine life, and other engine problems.

]ENOM00033-A

4. Break-In

Your new outboard motor and lower unit require break-in for the moving components according to the conditions described in the following time table.
Please refer to ENGINE OPERATION section (See page 24) to learn how to correctly start and operate the outboard motor.

ENOW00024-A

⚠ DANGER

Do not operate the outboard motor in closed area or area with no forced ventilation.
Exhaust gas emitted by this outboard motor contains carbon monoxide that will cause death if inhaled continuously. Inhaling the gas initially causes symptoms such as feeling of sickness, drowsiness and headache.
During operation of the outboard motor:

- **Keep peripheral area well ventilated.**
- **Always attempt to stay on the windward side of emission.**

ENOW00023-1

⚠ CAUTION

Operating the outboard motor without break-in can shorten service life.
If any abnormality is experienced during the break-in:

- **Discontinue the operation immediately.**
- **Have the dealer check the product and take proper action(s) if necessary.**

ENON00008-0

Note

Proper break-in allows outboard motor to deliver it full performance for longer service life.

	1–10 min	10 min – 2 hrs	2–3 hrs	3–10 hrs	After 10 hrs
Throttle Position	Idle	Less than 1/2 throttle	Less than 3/4 throttle	3/4 throttle	Full throttle available
Speed		Approx. 3000 min^{-1} (rpm) max	Full throttle run allowed for 1 min every 10 min	Approx. 4000 min^{-1} (rpm). Full throttle run allowed for 2 min every 10 min	

ENOM00042-0

Before starting

ENOW00022-A

⚠ CAUTION

The engine oil is drained for shipping from the factory. Be sure to fill the engine to the proper level before starting engine. (To properly fill the engine with oil follow the instructions. See page 41)

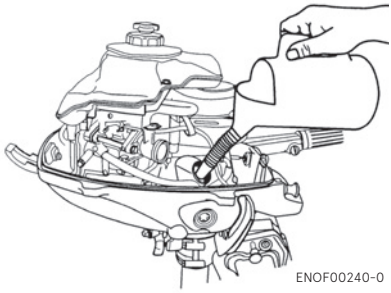

ENOF00240-0

ENOW00027-B

⚠ CAUTION

Before starting engine for the first time after reassembling engine or off-season storage, disconnect stop switch lock and crank approximately 10 times in order to prime the oil pump.

ENOM00044-D

1. Fuel feeding

ENOW00029-A

⚠ WARNING

When opening fuel tank cap, be sure to follow the procedure described below. Fuel could blast out through the fuel tank cap in case the cap is loosened by using another procedure when internal pressure of fuel tank is raised by heat from sources such as sun light.

1. Loosen the air vent screw on the tank cap by two turns.
2. Open the fuel cock.

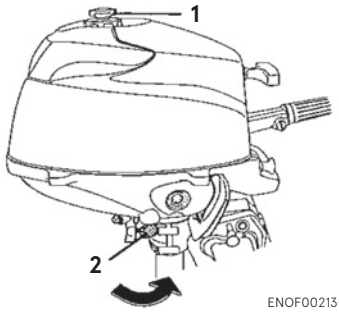

ENOF00213-0

1. Air vent screw
2. Fuel cock

ENOW00937-0

⚠ CAUTION

Be sure to close the fuel cock when the outboard motor is tilted up Otherwise, fuel could overflow.

ENOM00045-C

2. Starting the engine

ENOW00036-A

⚠ CAUTION

When the engine is started in the test tank, to avoid over heating and water pump damage, be sure the water level is at least 10 cm (4 in.) above the anti ventilation plate.
And be sure to remove the propeller, when starting the engine in the test tank. (See page 48)
Run the engine only at idling.

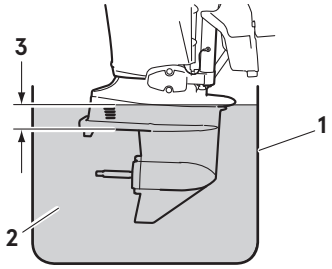

ENOF00863-0

1. Test tank
2. Water
3. Over 10 cm (4 in.)

ENOW00036-0

⚠ CAUTION

Be sure to stop engine immediately if cooling water check port is not discharging water, and check if cooling water intake is blocked. Operating engine could lead to overheating potentially leading to engine damage. Consult an authorized dealer if the cause cannot be found.

ENOW00032-B

⚠ CAUTION

Do not try to crank after engine has started.

1. Be sure to install the stop switch lock to the stop switch, and attach the stop switch lanyard securely to the operator or to the operator's PFD (Personal Flotation Device.)

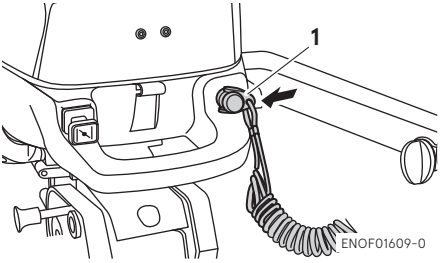

ENOF01609-0

1. Stop switch lock

2. Set the control lever in the Neutral position.

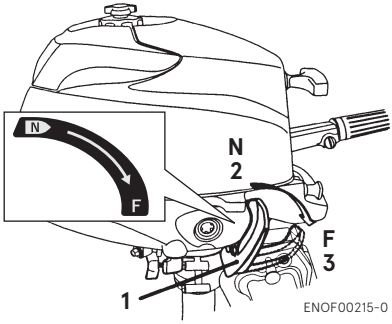

ENOF00215-0

1. Shift lever
2. Neutral (N)
3. Forward (F)

3. Set the throttle grip to START position.

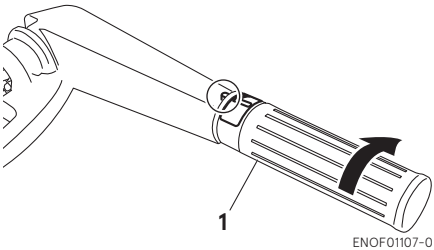

ENOF01107-0

1. Throttle grip

4. Pull the choke knob fully.

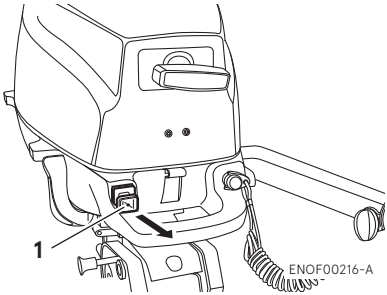

ENOF00216-A

1. Choke knob

ENON00501-0

Note

Choke is not necessary when the engine is warm. Set the throttle grip to "RE-START" position.

ENON00502-0

Note

If engine does not start with 4 or 5 times starting operation, push the knob back and restart.

5. Pull the starter handle slowly until you feel engagement, keep pulling till you feel less resistance. Then pull it quickly. repeat if necessary until started.

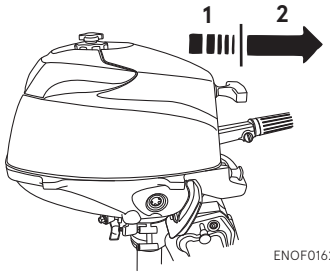

1. Slowly
2. Quickly

6. After engine starting, return the choke knob while check the engine speeds. if the engine speeds unstable, pull the choke knob to operated.
7. Be sure to check that cooling water is coming out of the cooling water check port.

ENOW00064-0

⚠ CAUTION

Engine may be hot immediately after operating and could cause burns if touched. Allow engine to cool down before attempting to carry the outboard.

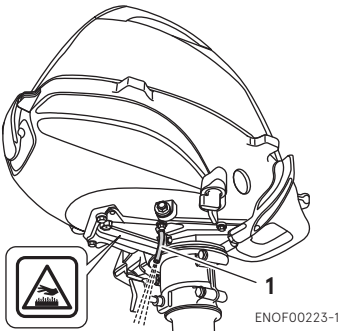

1. Cooling water check port

ENOM00042-B

Emergency starting

ENOW00099-A

⚠ WARNING

When the emergency starter rope is used for starting engine;

- **Start in gear protection does not work. Be sure to shift is at neutral position. Otherwise the engine will move the boat immediately and cause personal injury.**
- **Be careful that your clothes or other items do not get caught in the rotating engine parts.**
- **To prevent accident and injury by rotating parts, do not re-attach flywheel cover and the top cowl after the engine has been started.**
- **Do not pull starter rope if any bystander is behind. The action can injure the bystander.**
- **Attach engine stop switch lanyard to clothing or any part of body like arm before starting engine.**

1. Remove the top cowl.

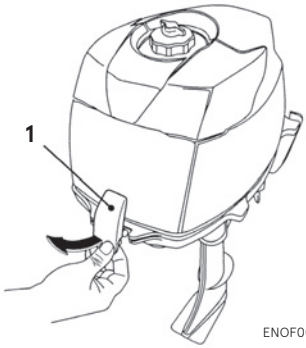

ENOF00217-0

1. Cowl latch

2. Loosen the three bolts (**A**, **B**, **C**) fastening the tank. (Don't remove the tank fastening bolts.)

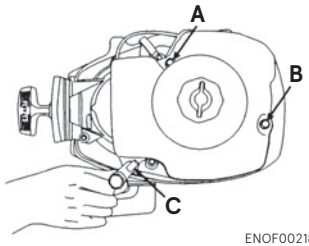

ENOF00218-0

3. Remove the three bolts (**D**, **E**, **F**) fastening the recoil starter.

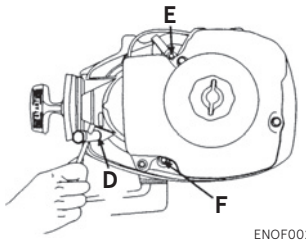

ENOF00219-0

4. Remove the recoil starter.

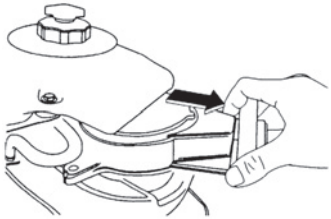

ENOF00220-0

5. Tighten the three bolts (**A**, **B**, **C**) fastening the tank and one bolt (**D**) fastening the recoil starter.

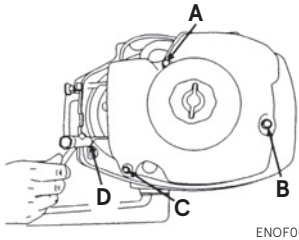

ENOF00221-0

6. Insert the knotted end of the starter rope into the notch in the flywheel and wind the rope around the flywheel several turns clockwise.

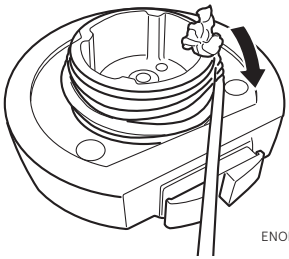

ENOF01610-0

7. Tie a loop in the another end of the emergency starter rope and attach socket wrench that is included in the tool kit.

8. Set the control lever in the Neutral position.
9. Pull the starter handle slowly until you feel engagement, keep pulling till you feel less resistance. Then pull it quickly.

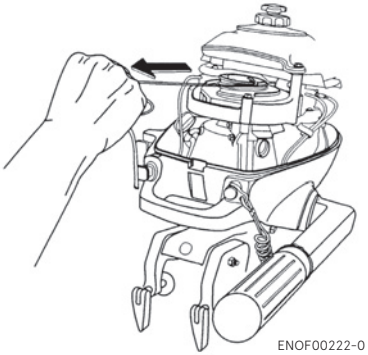
ENOF00222-0

10. After engine starts, do not reinstall flywheel cover and top cowl.

ENOM00043-B

3. Warming up the engine

ENOW00932-0

⚠ CAUTION

Be sure to check that cooling water is coming out of the cooling water check port during warm up.

Warm the engine at low engine speeds for about
3 minutes : above 5°C (41°F)
5 minutes at 2000 min^{-1} (rpm) : below 5°C (41°F)
This allows the lubricating oil to circulate to all parts of the engine. Operating the engine without warm up shortens the engine's life.

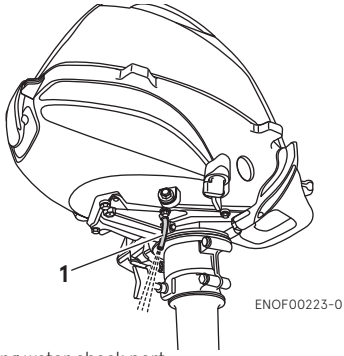

ENOF00223-0

1. Cooling water check port

ENOM00044-0

Engine speeds

Idling speed after warming up.
Remark: In case of cold engine starting, idling speed is increased about 300 min^{-1} (rpm) for several minutes.

Clutch in (In gear)	Clutch off (Out of gear)
1200 min^{-1} (rpm)	1300 min^{-1} (rpm)

ENOM00046-B

4. Forward, reverse, and acceleration

ENOW00037-0

⚠ WARNING

Before shifting into forward or reverse, make sure that boat is properly moored and outboard motor can be steered fully to the right and left. Make sure that no swimmer(s) is ahead or astern of the boat.

ENOW00038-A

⚠ WARNING

- **Attach other end of emergency stop switch lanyard to the operator's PFD (Per-**

sonal Flotation device) or arm and keep it attached during cruising.

- Do not attach the tether to a part of clothing that can be torn easily when pulled.
- Arrange the tether so that will not be caught by any object when pulled.
- Be careful not to pull the tether accidentally during cruising. Unintentional stop of engine can cause loss of control of outboard motor. Rapid loss of engine power can lead to falling down or causing passenger(s) to be thrown overboard.

ENOW00042-0

⚠ WARNING

- Do not shift into Reverse during planing, or control will be lost leading to serious personal injury, boat may swamp, and/or hull may be damaged.
- Do not shift into Reverse during cruising, or control may be lost, falling down or causing passenger(s) to be thrown overboard. Leading to serious personal injury, and steering system and/or shifting mechanism may be damaged.

ENOW00861-0

⚠ WARNING

Do not shift at high boat speed, or control may be lost, falling down or causing passenger(s) to be thrown overboard. Leading to serious personal injury.

ENOW00862-0

⚠ CAUTION

Gear and clutch damage may occur if shifting at high engine speed.
Engine must be in the slow idle position before shifting is attempted.

ENOW00863-0

⚠ CAUTION

Idle speed may be higher during warming up of engine. If shifted to Forward or Reverse during warming up, it may be difficult to shift back to neutral. In such case, stop engine, shift to neutral, and restart engine to warm up.

ENON00014-0

Note

Frequent shifting to forward or reverse can accelerate wear or degradation of parts. In such case, replace gear oil earlier than the period specified.

ENOW00864-0

⚠ CAUTION

Do not increase engine speed unnecessarily when the shift is in neutral and reverse, or engine damage may occur.

ENOM00890-B

Tiller handle type

ENOW00865-A

⚠ CAUTION

Do not force to shift when the throttle grip is not in the fully closed position, otherwise, steering system and/or shifting mechanism may be damaged.

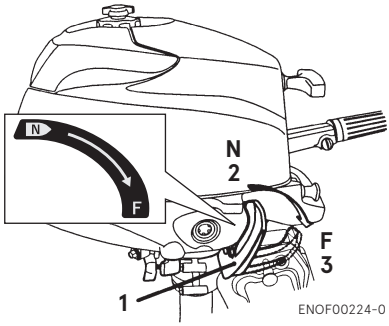

1. Shift lever
2. Neutral (N)
3. Forward (F)

Forward

1. Turn the throttle grip to reduce engine speed.
2. When the engine reaches trolling (or idling) speed, quickly pull the shift lever to the Forward position.

Reverse

1. Turn the throttle grip to reduce engine speed.
2. When the engine reaches trolling (or idling) speed, quickly pull the shift lever to the Neutral position.
3. The handle upright, turn the outboard motor at an angle of 180° and quickly turn the shift lever to the Forward (F) side.

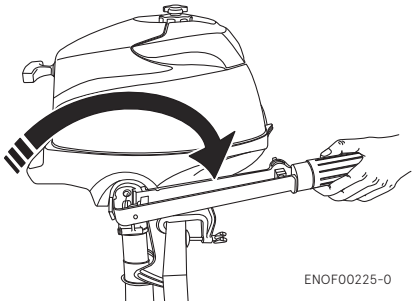

Acceleration

ENOW00867-0

⚠ WARNING

Sudden acceleration and deceleration may cause passenger(s) to be thrown overboard or falling down.

Open throttle grip gradually.

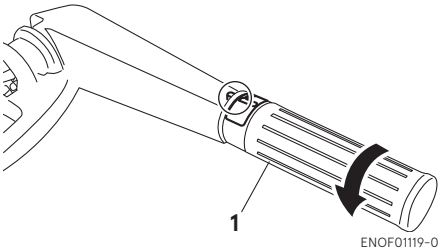

1. Throttle grip

ENOM00049-B

5. Stopping the engine

ENOW00868-0

⚠ WARNING

Be careful not to remove engine stop switch lanyard from engine accidentally while boat is running. Sudden stop of engine can cause loss of steering control. It can also cause loss of boat speed, possibly leading the crew(s) and or objects on the boat to be thrown forward due to inertial force.

Tiller handle type

1. Turn the throttle grip to the slow position.

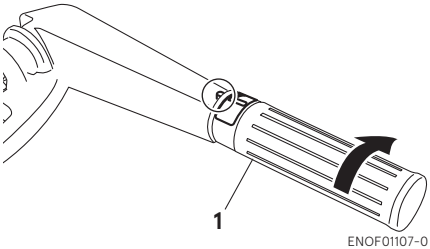

1. Throttle grip

2. Put the shift lever in the Neutral position.
   Run the engine for 2-3 minutes at idling speed for cooling down if it has been running at full speed.

3. Push the stop switch.

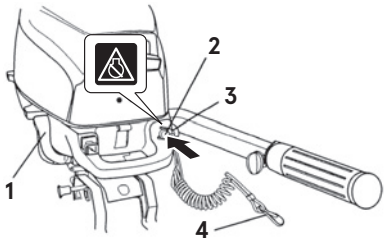

ENOF01611-A

1. Shift lever
2. Stop switch
3. Stop switch lock
4. Hook

4. Close the air vent screw and fuel cock.

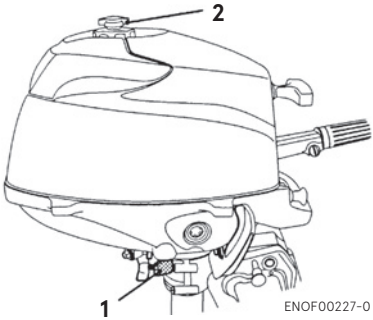

ENOF00227-0

1. Fuel cock
2. Air vent screw

ENOW00869-0

⚠ WARNING

After stopping the engine:

- **Close the air vent screw on the fuel tank cap.**
- **Disconnect the fuel connector of the engine and the fuel tank.**
- **Disconnect the battery cord, after each use.**

Emergency engine stopping

Remove stop switch lock to stop the engine.

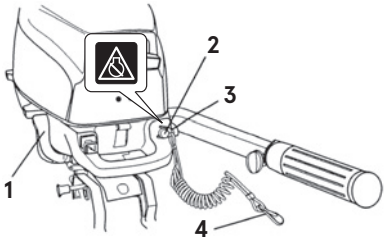

ENOF00226-A

1. Shift lever
2. Stop switch
3. Stop switch lock
4. Hook

ENOM00910-0

Spare emergency stop switch lock

A spare emergency stop switch lock is provided in the tool bag.

When used as described, the emergency stop switch clip and emergency stop switch lanyard system stops the engine if the operator falls away from the controls.

When an operator falls into water, be sure to use emergency stop switch lock of the spare.

Be sure to confirm the spare stop switch lock is in the tool bag before begin to operate.

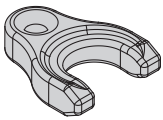

ENOF00891-0

ENOM00920-A

6. Steering

ENOW00870-0

⚠ WARNING

Sudden steering may cause passenger(s) to be thrown overboard or falling down.

Tiller handle type

Right turn

Move the tiller handle to the left

Left turn

Move the tiller handle to the right.

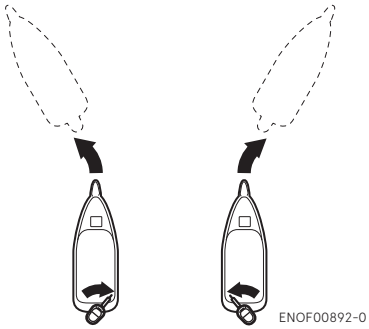

ENOF00892-0

ENOM00050-0

7. Trim angle

ENOW00043-A

⚠ WARNING

- **Adjust the trim angle when the engine is stopped.**
- **Do not put hand or finger in between outboard motor body and clamp bracket when adjusting trim angle to prevent injury in case the outboard motor body falls.**
- **Unsuitable trim position can cause loss of control of boat. When testing a trim position, run boat slow initially to see if it can be controlled safely.**

ENOW00044-0

⚠ WARNING

Excessive trim up or down may lead to unstable boat operation, potentially causing the steering difficulty that leads to accident during cruising.

- **Do not cruise at high speed if improper trim position is suspected. Stop the boat and readjust trim angle before continuing cruise.**
- **For outboard motor model with PTT switch on the bottom cowl, do not operate the switch during cruising, or control of boat may be lost.**

The trim angle of the outboard motor can be adjusted to suit the transom angle of the hull, and load conditions. Choose an appropriate trim angle that will allow the anti-ventilation plate to run parallel to the water surface during operation.

ENOM00052-0

Proper trim angle

The position of the thrust rod is correct if the hull is horizontal during operation.

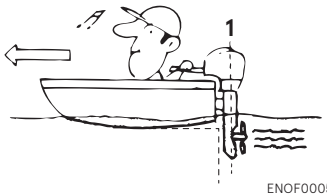

ENOF00051-1

1. Perpendicular to the water surface

ENOM00053-0

Improper trim angle (bow rises too high)

Set the thrust rod lower if the bow of the boat rises above horizontal.

ENOF00052-0

ENOM00054-0

Improper trim angle (bow dips into the water)

Set the thrust rod higher if the bow of the boat is below horizontal.

ENOF00053-0

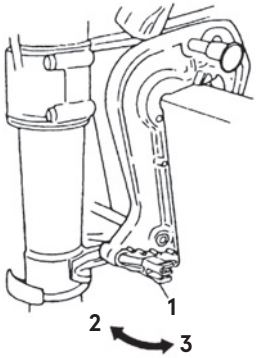

ENOF00229-0

1. Thrust rod
2. UP (Higher)
3. DOWN (Lower)

Trim angle adjustment (Manual tilt type)

The transom angle adjustment

1. Stop the engine.
2. Shift into neutral.
3. Raise the outboard motor to the tilt up position.
4. Change the thrust rod position as following picture.

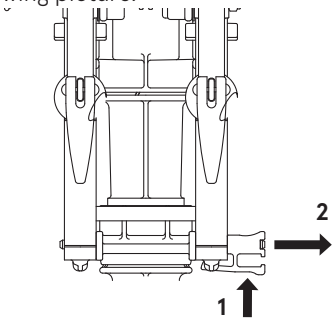

ENOF01612-0

1. Push
2. Pull

5. Reinstall the thrust rod securely.
6. Gentry lower the outboard.

ENOM00060-A

8. Tilt up and down

ENOW00055-0

⚠ WARNING

Do not tilt up or down outboard motor when swimmer(s) or passenger is near to prevent them from being caught between outboard motor body and clamp bracket in case the outboard motor body falls.

ENOW00048-0

⚠ WARNING

When tilting up or down, be careful not to place your hand between the swivel bracket and the stern bracket.
Be sure to tilt the outboard motor down slowly.

ENOW00056-A

⚠ WARNING

When tilting up outboard motor with fuel joint for over a few minutes, be sure to disconnect fuel hose, or fuel may leak, potentially catching fire.

ENOW00057-0

⚠ CAUTION

Do not tilt up outboard motor while engine operates, or no cooling water may be fed, leading to engine seizure due to overheating.

ENON00921-0

Note

Before tilting the outboard motor up, after stopping the motor leave it in the running position for about a minute to allow water to drain from inside the engine.

ENOM00222-0

Tilt up

1. Close the fuel cock and tighten the air vent screw of the tank cap.
2. Tilt up the outboard motor fully to your side and press the tilt stopper knob inside to set it up.

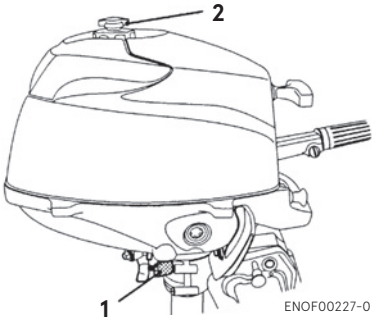

1. Fuel cock
2. Air vent screw

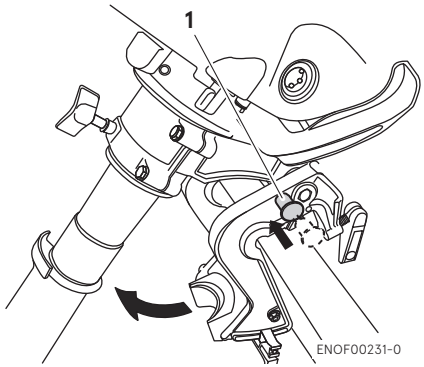

1. Tilt stopper

ENOM00223-0

Tilt down

Pull the outboard motor to your side and draw the tilt stopper knob out for tilting down.

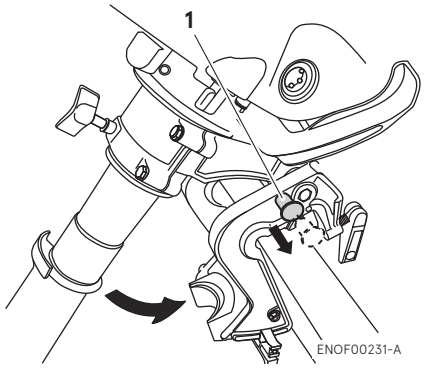

1. Tilt stopper

REMOVING AND CARRYING THE OUTBOARD MOTOR

ENOM00070-B

1. Removing the outboard motor

ENOW00064-0

⚠ CAUTION

Engine may be hot immediately after operating and could cause burns if touched. Allow engine to cool down before attempting to carry the outboard.

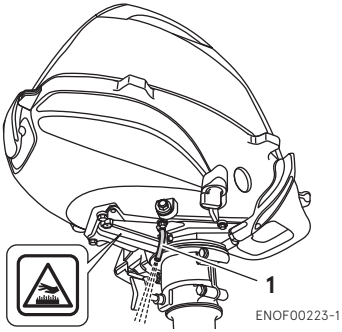

1. Cooling water check port

1. Stop the engine.
2. Remove the top cowl.
3. Disconnect the fuel connector, the remote control cables and the battery cords from the outboard motor.
4. Remove the outboard motor from boat and completely drain the water from the gear case.

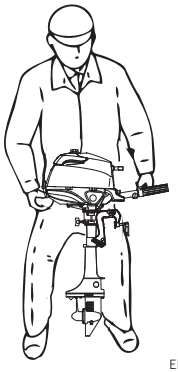

ENOM00071-A

2. Carrying the outboard motor

ENOW00065-0

⚠ WARNING

Close air vent screw of fuel tank before carrying or storing outboard motor and fuel tank, or fuel may leak, potentially catching fire.

ENOW00066-0

⚠ CAUTION

- **Do not give a shock to an outboard motor during transportation. It becames a cause of breakage.**
- **Do not carry or store outboard motor in any of positions described below. Otherwise, engine damage or property damage could result from leaking oil.**

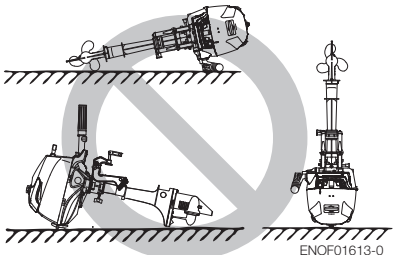

Keep the outboard motor in a vertical position when carrying.
The optional outboard motor stand is recommended for keeping the outboard motor vertical both during transport and storage.

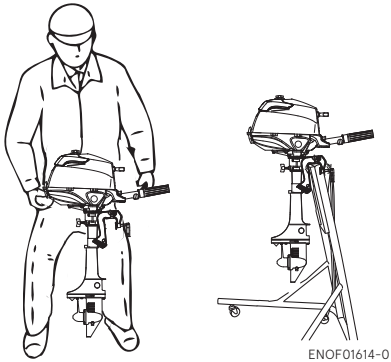

ENOF01614-0

ENON00021-1

Note

- If the outboard motor must be laid down be sure drain the fuel, then the port side faces down as shown in the following drawing.
- Elevate power unit 2 inches to 4 inches if traveling to avoid oil spillage.

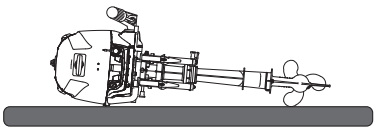

ENOF01615-0

ENOM00072-A

3. Trailering

ENOW00072-0

⚠ CAUTION

Trailering in the tilted position may cause damage to the outboard motor, boat, etc.

ENOW00068-0

⚠ WARNING

Close air vent screw of fuel tank and fuel cock before carrying or storing outboard motor and fuel tank, or fuel may leak, potentially catching fire.

ENOW00071-0

⚠ CAUTION

The tilt support device supplied on your outboard motor is not intended for towing. It is intended to support the outboard motor while the boat is docked, beached, etc.

ENOW00072-A

⚠ CAUTION

When trailering the outboard motor should be in a vertical (normal running) position, fully down. Trailering in the tilted position may cause damage to the outboard motor, boat, etc.
If trailering with outboard motor fully down is not available (the gear case skeg is too close to the road in a vertical position), fix the outboard motor securely using a device (like a transom saver bar) in the tilted position.

When transporting a boat on a trailer with the outboard motor still attached, disconnect the fuel line from the outboard motor beforehand and keep the outboard motor in the normal running position or on a transom saver bar.

Tiller handle type

To prevent the outboard motor from moving when it is attached on a boat during transport on a trailer, properly tighten the steering friction (page 38).

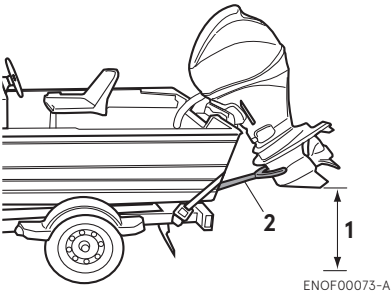

1. Ground clearance should be provided sufficiently.
2. Transom saver bar

ENOW00067-0

⚠ WARNING

Do not go under outboard motor tilted up even if it is supported by support bar, or accidental fall of outboard motor could lead to severe personal injury.

ADJUSTMENT

ENOM00073-0

1. Steering friction

Tiller handle type

ENOW00074-A

⚠ WARNING

Do not overtighten the steering friction lever it could result in difficulty of movement resulting in the loss of control causing an accident and could lead to severe injury.

Adjust this lever to achieve the desired steering friction (drag) on the tiller handle. Move lever towards (2) to decrease friction and move lever towards (3) to increase friction.

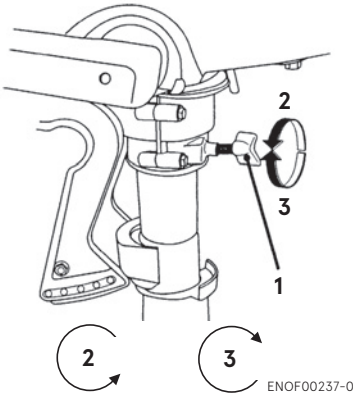

1. Steering friction lever
2. Decrease
3. Increase

EENOM00074-A

2. Throttle grip friction

ENOW00074-B

⚠ WARNING

Do not overtighten the throttle adjustment screw or it could result in difficulty of movement resulting in the loss of control causing an accident and could lead to severe injury.

Friction adjustment of the throttle grip can be made with the throttle adjustment screw.

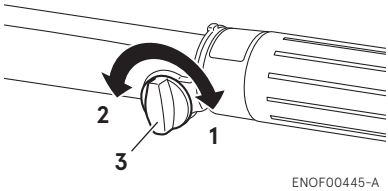

1. Increase
2. Decrease
3. Throttle friction adjustment screw

INSPECTION AND MAINTENANCE

ENOM00077-0

Care of your outboard motor

To keep your outboard motor in the best operating condition, it is very important that you perform daily and periodic maintenance as suggested in the maintenance schedules that follow.

ENOW00077-0

⚠ CAUTION

- **Your personal safety and that of your passengers depends on how well you maintain your outboard motor. Carefully observe all of the inspection and maintenance procedures described in this section.**
- **The maintenance intervals shown in the checklist apply to an outboard motor in normal use. If you use your outboard motor under severe conditions such as frequent full-throttle operation, frequent operation in brackish water, or for commercial use, maintenance should be performed at shorter intervals. If in doubt, consult your dealer for advice.**
- **We strongly recommend that you use only genuine replacement parts on your outboard motor. Damage to your outboard motor arising from the use of other than genuine parts is not covered under the warranty.**

ENOM00228-0

1. Daily Inspection

Perform the following checks before and after use.

ENOW00078-1

⚠ WARNING

Do not use outboard motor if any abnormality is found during pre-operation check otherwise it could result in severe damage to the motor or severe personal injury.

Item	Points to Check	Remedy
Fuel System	· Check the amount of fuel in the tank. · Check for debris in the fuel filters. · Check the rubber hoses for fuel leakage.	Fill fuel Clean or Replace Replace
Fuel Tank Cap	· Check for crack, leakage, damage in the fuel tank cap. · Check for crack, damage in the gasket and tether. · Check for leakage at full close. · Check for ratchet performance.	Replace Replace Replace Replace
Engine Oil	· Check the oil level, dirt and entering water.	Fill fuel or Replace
Electrical Equipment	· Check that the stop switch functions normally and make sure the lock plate is in right location. · Check cords for loose connections and damage. · Check the spark plug for dirt, wear and carbon build-up.	Remedy or replace Correct or replace Clean or replace
Throttle System	· Check that the carburetor choke valve functions normally. · Check carburetor linkage is working normally when turning the throttle grip.	Replace Correct
Recoil Starter	· Check the rope for wear and chafing. · Check the ratchet engagement.	Replace Correct or replace
Clutch and Propeller System	· Check that the clutch engages correctly when operation the shift lever. · Visually check the propeller and shear pin for bent or damaged blades. · Check that the split pin is on the propeller.	Adjust Replace
Installation of Motor	· Check the clamp screws attaching the motor to the boat for tightness. · Check the thrust rod installation.	Tighten
Cooling Water	· Check that cooling water is discharged from the cooling water check port after the engine has started.	
Tools and Spares	· Check that there are tools and spare parts for replacing spark plugs, the propeller, etc. · Check that you have the spare rope.	
Other parts	· Check if the anode is securely installed. · Check the anode for corrosion and deformation.	Repair if necessary Replace

ENOM00229-A

Oil level checking

1. Stop the engine and set it in a vertical position.
2. Remove the top cowl.
3. Check the oil level by the oil level gauge.

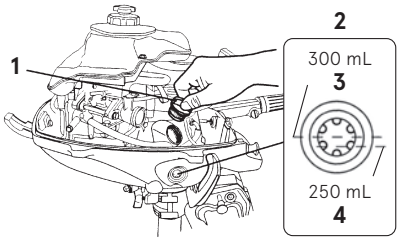

ENOF00239-0

1. Oil filler cap
2. Oil level gauge
3. Upper level
4. Lower level

ENON00024-0

Note

The oil level should be checked when the engine is cold.

ENON00025-0

Note

Consult with an authorized dealer if the engine oil is milky color, or appears contaminated.

ENOM00082-B

Engine oil replenishing

ENOW00079-A

⚠ CAUTION

- **Do not add engine oil of brand and grade other than existing one. In case engine oil of other brand or grade is added, drain all oil and ask dealer for treatment.**
- **In case other than engine oil such as gasoline is put in the oil chamber, empty the chamber and ask dealer for treatment.**
- **When replenishing engine oil, be careful not to allow entry of foreign matters such as dust and water into oil chamber.**
- **Wipe off engine oil well immediately if spilled and dispose of it in accordance with local fire prevention and environment protection regulations.**
- **Do not replenish engine oil over upper limit. If overfilled, remove oil to upper limit. If engine oil is over the upper limit, it can leak potentially leading to engine damage.**

If the oil level is low, or at lowest mark, add recommended oil to the upper mark.

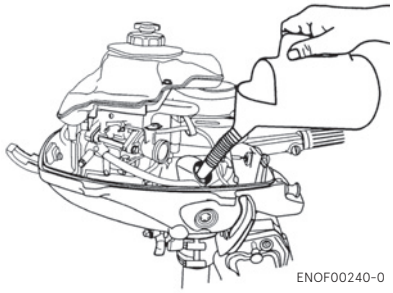

ENOF00240-0

ENOM00083-B

Washing outboard motor

ENOW00081-0

⚠ WARNING

Do not start engine without removing propeller, or accidentally turning propeller could cause personal injury.

ENOW00082-0

⚠ WARNING

Never start or operate the engine indoors or in any space which is not well ventilated. Exhaust gas contains carbon monoxide, a colorless and odorless gas which can be fatal if inhaled for any length of time.

ENOW00920-0

⚠ CAUTION

When washing the outboard motor, be careful not to spray the water inside of the top cowl, especially electrical components.

ENON00026-0

Note

It is recommended to check chemical properties of water on which your outboard motor is regularly used.

If outboard motor is used in salt water, brackish water or water with a high acidic level, use fresh water to remove salt, chemicals or mud. And flush cooling water passage after every cruising or before storing outboard motor for long time. Before flushing, remove the propeller and the forward thrust holder.

ENOM00085-B

Flushing attachment

ENOW00922-0

⚠ CAUTION

To prevent the engine from starting when you are near the propeller, remove the stop switch lock.

10

1. Tilt down the outboard motor.
2. Remove the water plug from the gear case, and screw in the flushing attachment.
3. Attach the flushing attachment and connect a water hose. Turn on the water and adjust the flow. Continue flushing the outboard motor for 3 to 5 minutes.
4. After the flushing, be sure to reattach the water plug.
5. Tilt up the outboard motor.

.

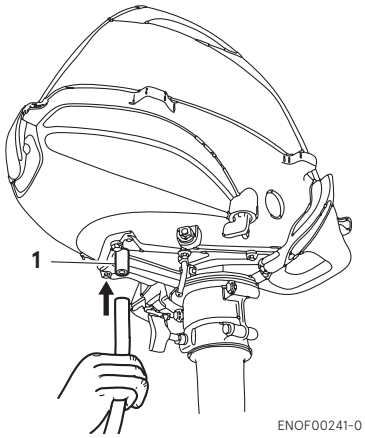

ENOF00241-0

1. Flushing attachment (option)

ENOM00085-A

Flushing by test tank

ENOW00081-0

⚠ WARNING

Do not start engine without removing propeller, or accidentally turning propeller could cause personal injury.

ENOW00082-0

⚠ WARNING

Never start or operate the engine indoors or in any space which is not well ventilated. Exhaust gas contains carbon monoxide, a colorless and odorless gas which can be fatal if inhaled for any length of time.

ENOW00036-A

⚠ CAUTION

When the engine is started in the test tank, to avoid over heating and water pump damage, be sure the water level is at least 10 cm (4 in.) above the anti ventilation plate.

And be sure to remove the propeller, when starting the engine in the test tank. (See page 48)
Run the engine only at idling.

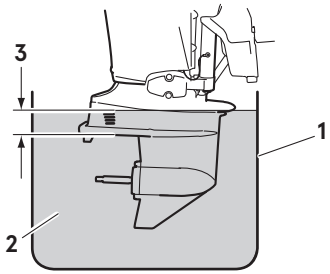

ENOF00863-0

1. Test tank
2. Water
3. Over 10 cm (4 in.)

ENOM00235-0

2. Periodic Inspection

It is important to inspect and maintain your outboard motor regularly. At each interval on the chart below, be sure to perform the indicated servicing. Maintenance intervals should be determined according to the number of hours or number of months, whichever comes first.

Description		Inspection intervals				Inspection procedure	Remarks
		First 20 hours of 1 month	Every 50 hours of 3 months	Every 100 hours of 6 months	Every 200 hours of 1 year		
Fuel System	Carburetor*1			●	●	Strip clean, and adjust.	
	Fuel filter	●	●	●	●	Check and clean or Replace if necessary.	
	Piping/Hoses	●	●	●	●	Check and clean or Replace if necessary.	
	Fuel tank	●	●	●	●	Clean.	
	Fuel tank cap	●	●	●	●	Check and clean or Replace if necessary.	
Ignition	Spark plug	●		●	●	Check gaps. Remove carbon deposits or Replace if necessary.	0.8–0.9 mm (0.031–0.035 in)
	Ignition timing*1	●		●	●	Check timing.	
Starting System	Starter rope*1	●	●	●	●	Check for wear or chafing.	
Engine	Engine oil	Replace ●		Replace ●	Replace ●	Replace if necessary.	(See page 41)
	Valve Clearance*1	●		●	●	Check & adjust.	IN: 0.06–0.14 mm (0.0024–0.0055 in) EX: 0.11–0.19 mm (0.0043–0.0075 in)
	Thermostat*1			●	●	Check and Replace if necessary.	
Lower Unit	Propeller	●	●	●	●	Check for bent blades, damage, wear.	
	Shear pin and split pin	●	●	●	●	Check or Replace if necessary.	
	Gear oil	Replace ●		Replace ●	Replace ●	Change or replenish-oil and check for water leaks.	180 mL (6.1 fl.oz.)
	Water pump*1		●	●	●	Check for wear or damage.	Replace impeller every 12 months.
Bolts and Nuts		●		●	●	Retighten.	

Description	Inspection intervals				Inspection procedure	Remarks
	First 20 hours of 1 month	Every 50 hours of 3 months	Every 100 hours of 6 months	Every 200 hours of 1 year		
Sliding and Rotating Parts Grease Nipples	•	•	•	•	Apply and pump in grease.	
Outer Equipment	•	•	•	•	Check for corrosion.	
Anode		•	•	•	Check for corrosion and deformation.	Replace if necessary.

*1: Have this handled by your dealer.

SENON00030-0

Note

Your outboard motor should receive careful, and complete inspection at 300 hours. This is the best time for major maintenance procedures to be carried out.

ENOM00091-B

Engine oil replacement

ENOW00091-0

⚠ CAUTION

You may be injured due to high engine temperatures if you fill engine oil just after stopping. Changing engine oil should be done after the engine has been cooled.

ENOW00092-A

⚠ CAUTION

- **Do not overfill engine oil, or engine oil could leak and/or engine could be damaged. If engine oil level is over upper limit marks of oil gauge, drain oil to level lower than upper limit.**
- **Be sure that outboard motor is in upright and level position when checking or changing oil.**
- **Stop engine immediately if low oil pressure warning lamp is lit or oil leak is found, or engine could be severely damaged. Consult dealer.**
- **Wipe off engine oil well immediately if spilled and dispose of it in accordance with local fire prevention and environment protection regulations.**

ENOW00090-0

⚠ CAUTION

Use of engine oils that do not meet these requirements will result in reduced engine life, and other engine problems.

ENOW00933-0

⚠ CAUTION

Engine oil mixed with dust or water will dramatically shorten the life of the engine.

To change engine oil:

Be sure to use recommended engine oil (see page 13).

1. Stop the engine and allow it to cool.
2. Put a oil drain pan under the oil drain screw.
3. Remove the oil drain screw and completely drain oil from the engine.

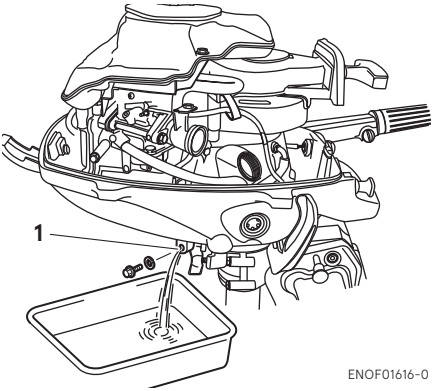

1. Drain hole

4. Tighten the oil drain screw with applying oil on the sealing surface of screw. (Use new oil drain washer)

Oil drain screw specified torque
18N·m (13 ft·lb, 1.8 kgf·m)

ENON00028-A
Note

If a torque-wrench is not available when you are fitting a oil filter, a good estimate of the correct torque is 3/4 to 1 a turn past finger-tight. Have the oil filter adjusted to the correct torque as soon as possible with a torque-wrench.

5. Reset the engine in a vertical position.
6. Repeat 3 to 7 procedures two or three times to drain the oil completely.
7. Remove the top cowl and the oil filler cap.
8. Fill the engine through filler port with recommended oil (see chart below) to the middle of dipstick mark.
9. Tighten the oil filler cap.

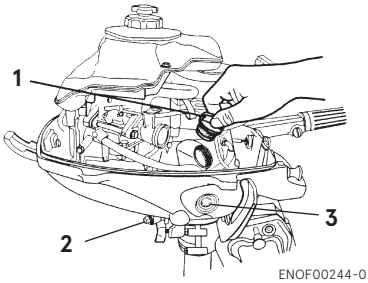

1. Oil filler cap
2. Engine oil drain screw
3. Engine oil level gauge

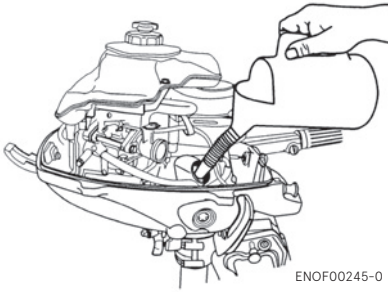

ENON00920-0
Note

Use only recommended engine oil (See page 13)

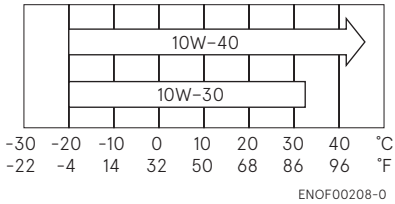

Oil volume needed for complete oil replacement
300 mL (10 fl.oz.)

ENOW00925-0

⚠ CAUTION

Wipe off engine oil well immediately if spilled and dispose of it in accordance with local fire prevention and environment protection regulations.

ENON00031-0

Note

- If any amount of water is found in engine oil, making it milky white, consult dealer.
- If engine oil is contaminated with fuel, emitting strong fuel smell, consult dealer.
- Some oil dilution is normal if engine is idled or trolled for long periods, especially in cooler water temperatures.

ENOM00098-A

Gear oil replacement

ENOW00094-0

⚠ WARNING

- **Be sure that outboard motor is secured to transom or service stand, or accidental drop or fall of outboard motor could lead to severe personal injury.**
- **Be sure to lock outboard motor if it is tilted up, or accidental fall of outboard motor could lead to severe personal injury.**
- **Do not go under outboard motor tilted up and locked, or accidental fall of outboard motor could lead to severe personal injury.**

1. Tilt down the outboard motor.
2. Remove the oil plugs (lower and upper), and completely drain the gear oil into a pan.

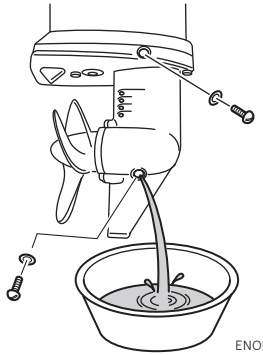

ENOF01617-0

3. Insert the oil tube nozzle into the lower oil plug hole, and fill with gear oil by squeezing the oil tube until oil flows out of the upper plug hole and bubbles is disappeared to remove the air.

ENON00033-0

Note

Use genuine gear oil or the recommended one (API GL-5: SAE #80 to #90).
Required volume: approx. 180 mL (6.1 fl.oz).

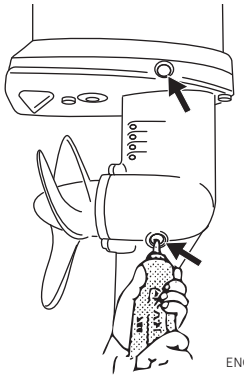

ENOF01618-0

4. Install the upper oil plug, and then remove oil tube nozzle and install the lower oil plug.

ENOW00095-0

⚠ CAUTION

Do not reuse oil plug gasket. Always use new gasket and tighten oil plug properly to prevent entry of water into lower unit.

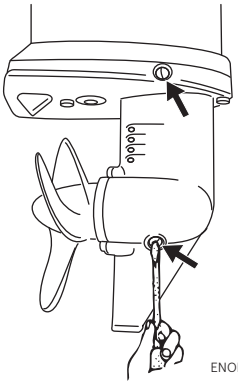

ENOF01619-0

ENOW00928-0

⚠ CAUTION

Wipe off gear oil well immediately if spilled and dispose of it in accordance with local fire prevention and environment protection regulations.

ENON00032-0

Note

If water in the oil, giving it a milky colored appearance. Contact your dealer.

ENON00033-0

Note

Use genuine gear oil or the recommended one (API GL-5: SAE #80 to #90).
Required volume: approx. 180 mL (6.1 fl.oz).

ENOM00232-A

Propeller replacement

ENOW00084-0

⚠ WARNING

- **Do not begin propeller removal and installation procedure with spark plug caps attached, shift in forward or reverse, main switch at other than "OFF", engine stop switch lock attached to the switch, and starter key attached, or engine could accidentally start leading to serious personal injury. Disconnect battery cable if possible.**
- **The propeller edge is thin and sharp. Wear the groves during replacement to protect your hands.**

ENOW00208-0

⚠ CAUTION

- **Do not install propeller without thrust holder, or propeller boss could be damaged.**
- **Do not reuse split pin.**
- **After installing split pin, spread the pin apart to prevent it from falling out which could lead to the propeller coming off during operation.**

A worn-out or bent propeller will lower the motor's performance, and cause engine trouble.

1. Pull out the split pin from the propeller boss and remove the propeller from the shaft.

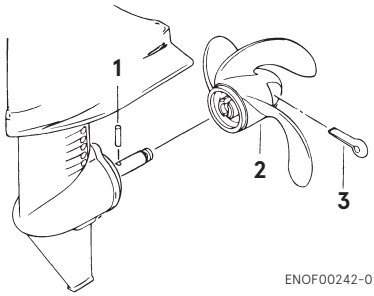

ENOF00242-0

1. Shear pin
2. Propeller
3. Split pin

2. Remove the shear pin from the shaft.

3. Apply water proof grease to the propeller shaft before installing a new propeller.
4. Install the propeller with a new shear pin.

ENOM00087-A

Spark plugs replacement

ENOW00087-0

⚠ WARNING

- **Do not reuse spark plug with damaged insulation, or sparks can leak through crack, potentially leading to electric shock, explosion and/or fire.**
- **Do not touch spark plugs immediately after stopping engine as they will be hot and could cause severe burns if touched. Allow motor to cool down first.**

ENOW00929-0

⚠ CAUTION

Use only the recommended spark plugs. Spark plugs which have an different heat range may cause engine damage.

If the spark plug(s) is fouled, has carbon build up, or is worn, it should be replaced.
When reusing spark plugs, remove dirt from the electrodes and adjust spark gap to specification.

1. Stop the engine.
2. Remove the top cowl.
3. Remove the spark plug caps.
4. Remove the spark plugs by turning it counter-clockwise, using a 5/8" (16 mm) socket wrench and handle that is provided in tool bag.
5. Inspect the spark plug. Replace the spark plug if the electrodes are worn or if the insulators are cracked or chipped.
6. Measure the spark plug electrode gap with a wire type feeler gauge. The gap should be 0.8-0.9 mm (0.031-0.035 inches). If the gap is different, replace the spark plug with a new one

   Use spark plug NGK DCPR-6E.

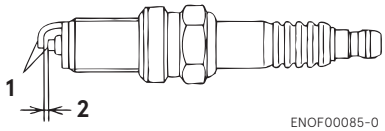

1. Electrode
2. Spark gap (0.8–0.9 mm, 0.031–0.035 in)

7. Install the spark plug by hand and turn it carefully to avoid cross-threading.
8. Tighten the spark plug to the specified torque.

ENON00028-0

Note

- **Spark plug torque:**
  18.0 N·m (13.3 ft·lb) [1.84 kgf·m]

If a torque-wrench is not available when you are fitting a spark plug, a good estimate of the correct torque is 1/4 to 1/2 a turn past finger-tight. Have the spark plug adjusted to the correct torque as soon as possible with a torque-wrench.

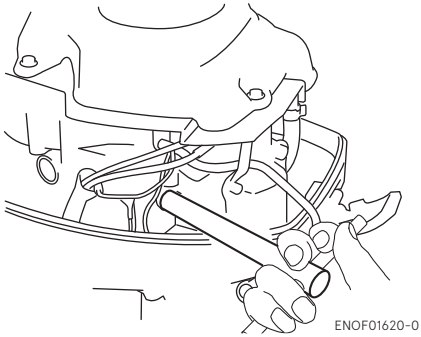

ENOM00088-B

Anode replacement

A sacrificial anode protects the outboard motor from electrolytic corrosion. Anode is located on the gear case, cylinder etc.. When the anode is eroded more than 1/3 of original size, replace it.

ENON00029-0

Notes

- Never grease or paint the anode.
- At each inspection re-tighten the anode attaching bolt. As it is likely to be subjected to electrolytic corrosion.

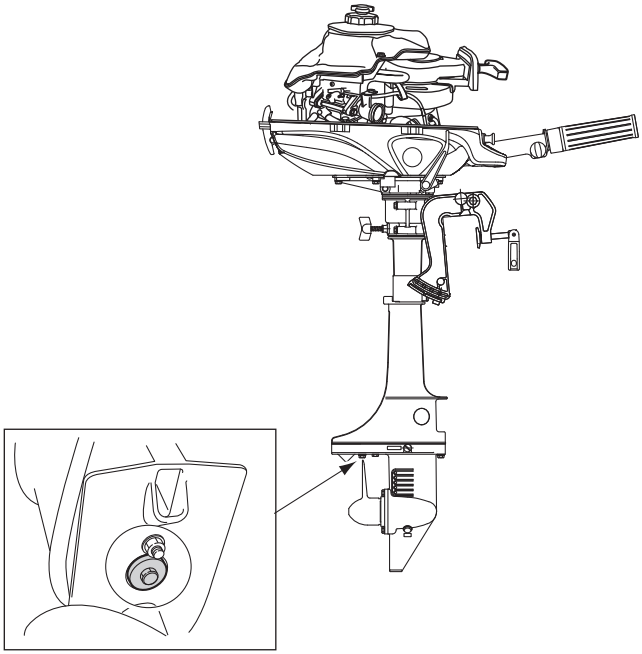

ENOF01621-0

ENOM00960-0

Grease point

Apply water proof grease to the parts shown below.

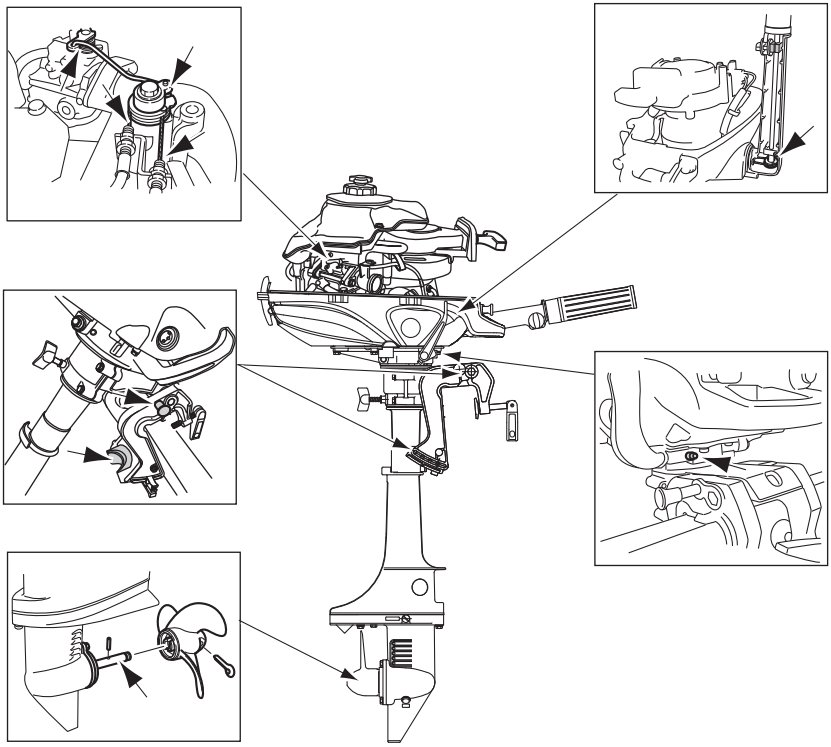

ENOF01622-0

ENOM00100-A

3. Off-season storage

ENOW00934-0

⚠ WARNING

- **Be sure to disconnect fuel connector except when operating engine.**
- **Fuel leakage is a fire or explosion hazard, which can cause serious injury or death.**

ENOW00097-0

⚠ WARNING

Be sure to use cloth to remove fuel remaining in the cowl and dispose of it in accordance with local fire prevention and environment protection regulations.

Before you put your outboard motor in storage, it is a good opportunity to have it serviced and prepared by your dealer.
Be sure to use fuel stabilizer while running the motor before storage. (See page 53)

ENOM00101-A

Engine

1. Wash the engine exterior and flush the cooling water system thoroughly with fresh water. Drain the water completely.
   Wipe off any surface water with an oily rag.
2. Remove the fuel hose from the outboard motor.
3. Drain all fuel from the fuel hoses, fuel pump and carburetor (See page 53), and clean these parts.
   Keep in mind that if gasoline is kept in the carburetor for a long time, gum and varnish will develop, causing the float valve to stick, restricting the fuel flow.
4. Remove the spark plugs and put a teaspoon of engine oil or spray storage oil into the combustion chamber through the spark plug holes.
5. Turn the starter motor several turns to lubricate inside the cylinder.

ENOW00930-0

⚠ WARNING

- **Be sure to remove stop switch lock to prevent ignited the spark plugs.**
- **Put a cloth to spark plug hole and wipe up any spilled engine oil, when cranking the outboard motor.**

6. Change the engine oil (See page 45).
7. Change the gear oil in the gear case (See page 47).
8. Apply grease to grease point (See page 51).
9. Stand the outboard motor up vertically in a dry place.

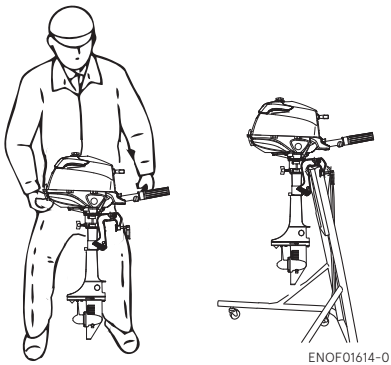
ENOF01614-0

ENOW00066-0

⚠ CAUTION

Do not carry or store outboard motor in any of positions described below.
Otherwise, engine damage or property damage could result from leaking oil.

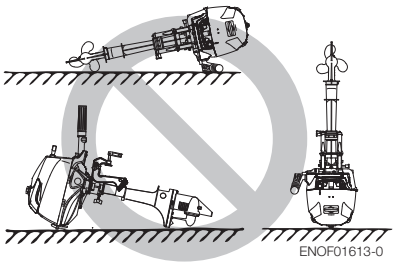
ENOF01613-0

ENON00021-1
Note

- If the outboard motor must be laid down be sure drain the fuel, then the outboard motor on a cushion as shown in the following drawing (See page 53 and 35).
- Elevate power unit 2 inches to 4 inches if traveling to avoid oil spillage.

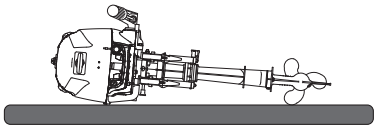
ENOF01615-0

ENOM00950-0
Adding a fuel stabilizer

When adding a fuel stabilizer additive (commercially available), first fill the fuel tank with fresh fuel. If the fuel tank is only partially filled, air in the tank can cause the fuel to deteriorate during storage.

1. Before adding fuel stabilizer additive, drain the carburetor (See page 53).
2. Follow the instructions on the label when adding the fuel stabilizer additive.
3. After adding the additive, let the outboard motor run in the water for 10 minutes to make sure any old fuel in the fuel system has been completely replaced by the fuel with additive.
4. Turn the engine OFF

ENON00891-0
Note

If your motor is used occasionally, it is recommended to use a good fuel stabilizer in every tank of fuel and keep the container full to reduce condensation and evaporation.

ENOM00970-B
Fuel system draining

ENOW00028-A

⚠ WARNING

For details on handling fuel, contact an authorized dealer.

Fuel and fuel vapors are extremely flammable and can be explosive.

- **If fuel is spilled, wipe it up immediately.**
- **Keep the fuel tank well away from sources of ignition, e.g. sparks or open flames**
- **Perform all work outdoors or in a well ventilated place.**

ENOW00097-0

⚠ WARNING

Be sure to use cloth to remove fuel remaining in the cowl and dispose of it in accordance with local fire prevention and environment protection regulations.

1. Turn off the fuel cock.

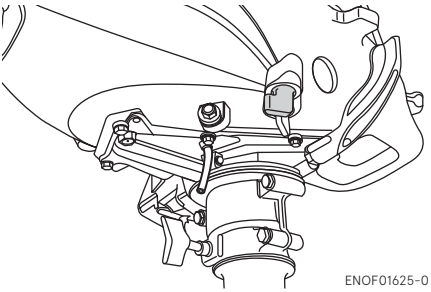

ENOF01625-0

2. Remove the top cowl.
3. Place an approved rag under the drain screw.
4. Loosen the carburetor drain screw.

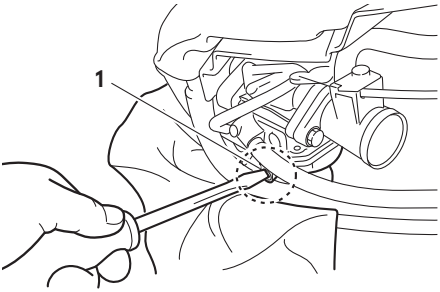

ENOF01623-0

1. Carburetor drain screw

5. Leave the outboard motor in this position until all fuel has been drained.
6. When thoroughly drained, retighten the drain screw securely.
7. Check the drained fuel for the presence of water or other contaminants. If either is present, reassemble the outboard motor, refill the carburetor with fuel, and then drain the fuel again. Repeat this procedure until no water or other contaminants are present in the drained fuel.

ENOM00104-B

4. Pre-season check

The following steps must be taken when first using the engine after off-season storage.

1. Check that the shift and throttle function properly. (Be sure to turn the propeller shaft when checking the shift function or else the shift linkage may be damaged.)
2. Change the engine oil (See page 45).
3. Before starting the engine, disconnect stop switch lock and crank approximately 10 times in order to prime the oil pump.
4. Fill fuel tank completely.
5. Start the engine and warm up the engine for 3 minutes in the "NEUTRAL" position.
6. Run the engine for 5 minutes at the slowest speed.
7. Run the engine for 10 minutes at half throttle. The oil used for storage inside the engine will be circulated out to assure optimum performance.

ENOM00105-B

5. Submerged outboard motor

ENOW00098-0

⚠ CAUTION

Do not attempt to start submerged outboard motor immediately after it is recovered, or engine could be severely damaged.

After taking your outboard motor out of the water, immediately take it to your dealer.

The following are the emergency measures to be taken for a submerged outboard motor, if you can not take it your dealer right away.

1. Wash the outboard motor with fresh water to remove salt or dirt.
2. Remove the engine oil drain screw and completely drain water and oil from the engine.
3. Remove the spark plugs, and completely drain the water from the engine by pulling recoil starter several times.
   Replace oil to the correct level.
   The oil may need to be changed again after running a short period to get all moisture completely out of the crankcase.
4. Inject a sufficient amount of engine oil through the spark plug holes.
   Pull the recoil starter rope several times to circulate the oil throughout the outboard motor.

ENOM00106-A

6. Cold weather precautions

If you moor your boat in cold weather at temperatures below 0°C (32°F), there is the danger of remained water freezing in the cooling water pump, which may damage the pump, impeller, etc. To avoid this problem, submerge the lower half of the outboard motor into the water.

ENOM00107-A

7. Striking underwater object

ENOW00935-0

⚠ CAUTION

Striking the sea bottom or an underwater object may severely damage the outboard motor.

Follow the procedure below and consult a dealer as soon as possible.

1. Stop the engine immediately.
2. Check the control system, gear case, boat transom etc.
3. Return to the nearest harbor slowly and carefully.
4. Consult a dealer check the outboard motor before operation again.

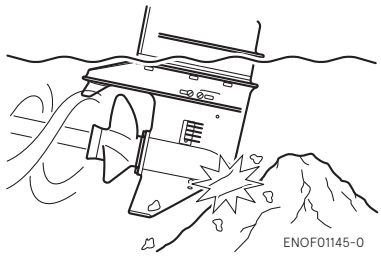

ENOM00120-2

8. Auxiliary outboard motor operation

When the auxiliary outboard motor is not in operation, be sure to remove the stop switch lock, shift into forward, and then tilt the outboard motor up. Otherwise, over-rotation of the propeller due to water spray and water ingestion that could cause damage to the outboard motor.

TROUBLESHOOTING

ENOM00241-0

If you encounter a problem, consult the check list below to determine the cause and to take the proper action.
An authorized dealer will always be happy to provide any assistance and information.

	Engine failing to start	Engine starting but stopping soon	Poor idling	Poor acceleration	Engine speed abnormally high	Engine speed abnormally low	Boat speed low	Overheating of engine	Possible cause
FUEL SYSTEM	●	●							Empty fuel tank
	●	●	●	●		●	●		Deformed or damaged fuel hose
	●	●	●	●		●	●	●	Closed air vent on fuel tank
	●	●	●	●		●	●	●	Clogged fuel filter, fuel pump, or carburetor
			●	●		●	●	●	Use of improper engine oil
	●	●	●	●			●	●	Use of improper gasoline
	●			●					Excessive supply of fuel
	●	●	●	●		●	●	●	Poor carburetor adjustment
ELECTRICAL SYSTEM	●	●	●	●		●	●	●	Spark plug other than specified
	●	●	●	●		●	●		Dirt, soot, etc. on spark plug
	●	●	●	●		●	●		No spark or weak spark
	●								Short circuit of engine stop switch
	●		●	●		●	●		Ignition timing incorrect
	●								Lock plate not fitted to stop switch
	●								Disconnection of wire or loose ground connection

	Engine failing to start	Engine starting but stopping soon	Poor idling	Poor acceleration	Engine speed abnormally high	Engine speed abnormally low	Boat speed low	Overheating of engine	Possible cause
OTHERS	●		●	●		●	●		Incorrect adjustment of throttle link
							●	●	Insufficient cooling water flow, clogged or defective pump
			●				●	●	Faulty thermostat
				●	●		●	●	Cavitation or ventilation
				●	●	●	●	●	Incorrect propeller selection
			●	●	●	●	●	●	Damaged and bent propeller
				●	●		●	●	Improper thrust rod position
				●	●	●	●	●	Unbalanced load on boat
				●	●	●	●	●	Transom too high or too low
		●	●	●		●			Low compression
			●					●	Carbon deposits in the combustion chamber
	Engine makes noise								Too much the valve clearance

ACCESSORIES KIT

ENOM00242-0

The following a list of the tools and spare parts provided with the motor.

Items		Quantity	Remark
Service tools	Tool bag	1	
	Pliers	1	
	Socket wrench	1	10 × 13 mm
	Socket wrench	1	16 mm
	Socket wrench handle	1	
	Screwdrivers	1	Cross-and straight-point
	Screwdriver handle	1	
Spare parts	Emergency starter rope	1	ø4–1000 mm
	Spark plug	1	NGK: DCPR6E
	Shear pin	1	
	Split pin	1	
	Stop switch lock	1	

PROPELLER TABLE

ENOM00245-0

Use a genuine propeller.
A propeller must be selected so that the engine rpm measured at wide open throttle while cruising is within the recommended range.

2.5: 4500–5500 min^{-1} (rpm)
3.5: 5000–6000 min^{-1} (rpm)

ENON00245-0

Note

Each size shows number of propeller blades × diameters × pitch.

	Propeller Mark	Propeller Size Diameter × pitch	Material	Remarks
Light boats	7	3 × 188 × 178 mm 3 × 7.4 × 7.0 in	Plastics	Standard
	6	3 × 188 × 145 mm 3 × 7.4 × 5.7 in	Plastics	Option
			Aluminum	Option
Heavy boats	4.5	3 × 188 × 110 mm 3 × 7.4 × 4.3 in	Plastics	Option

klimasklep
www.klimasklep.pl (91) 432-43-42 sklep@klimasklep.pl
klimasklep
www.klimasklep.pl (91) 432-43-42 sklep@klimasklep.pl
klimasklep
www.klimasklep.pl (91) 432-43-42 sklep@klimasklep.pl

KLIMASKLEP
ul. Orzechowa 3
72-010 Przęsocin (koło Szczecina)

tel.: **(91) 432-43-42**

e-mail: **kontakt@klimasklep.pl**
www: **www.KlimaSklep.pl**