OWNER'S MANUAL

MANUEL DE L'UTILISATEUR
MANUAL DEL PROPIETARIO
BENUTZERHANDBUCH

TOHATSU
Feel the Wind™

KLIMASKLEP, ul. Orzechowa 3, 72-010 Przęsocin (koło Szczecina)
tel.: (91) 432-43-42, tel.: (91) 432-43-49
e-mail: kontakt@klimasklep.pl, www: www.KlimaSklep.pl

MFS 9.9E
MFS 15E
MFS 20E

OB No.003-11144-1AH1

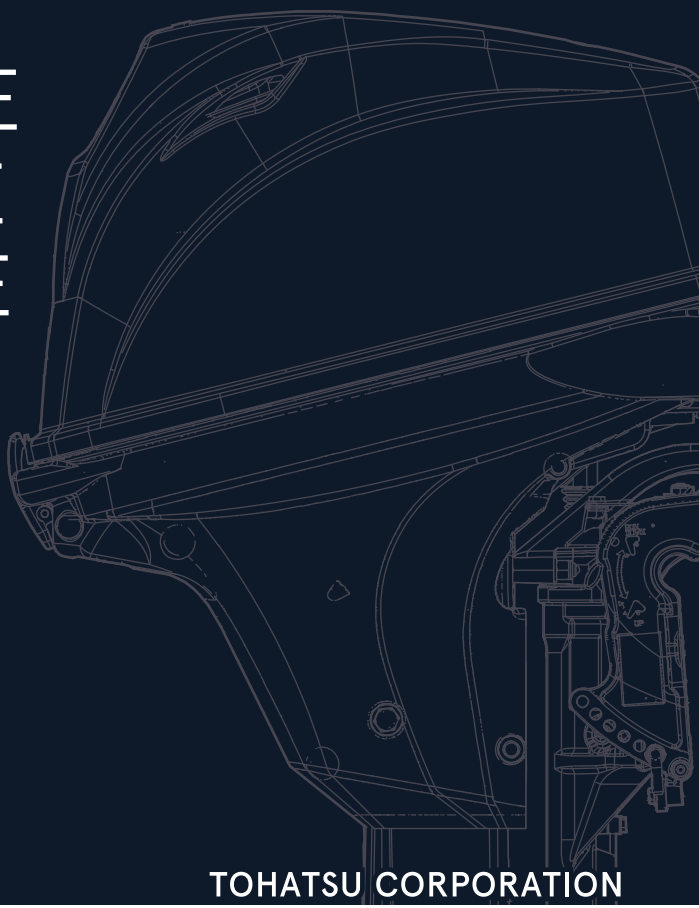

BACKS YOU UP™

TOHATSU CORPORATION

klimasklep www.klimasklep.pl (91) 432-43-42 sklep@klimasklep.pl
klimasklep www.klimasklep.pl (91) 432-43-42 sklep@klimasklep.pl
klimasklep www.klimasklep.pl (91) 432-43-42 sklep@klimasklep.pl

OWNER'S MANUAL

TOHATSU

Feel the Wind™

Original instructions

MFS 9.9E
MFS 15E
MFS 20E

OB No.003-11144-1AH1

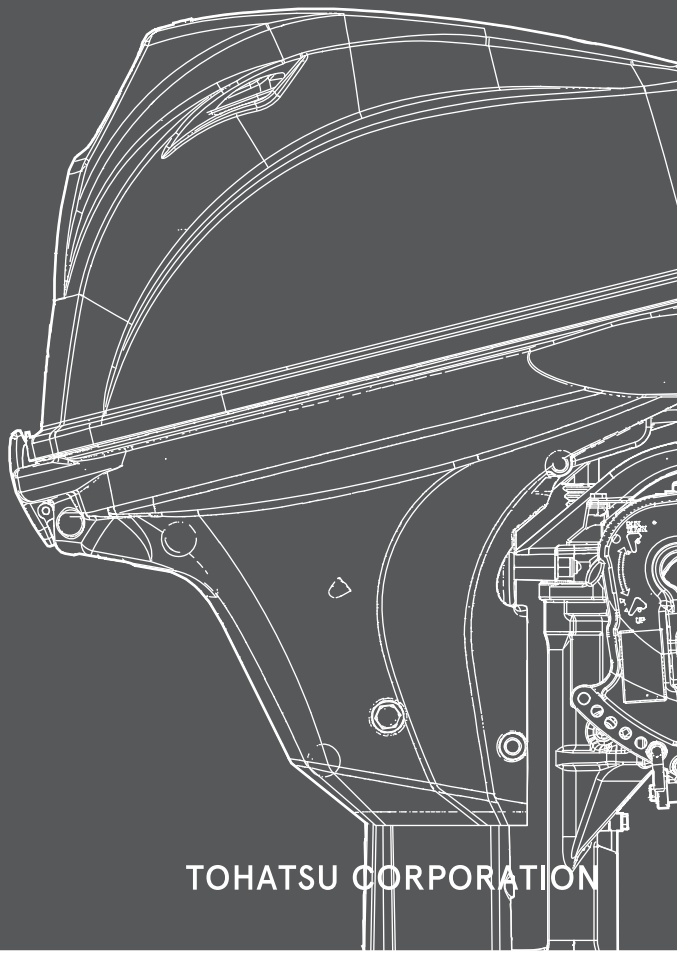

BACKS YOU UP™

TOHATSU CORPORATION

ENOM00001-0

⚠ **READ THIS MANUAL BEFORE USING THE OUTBOARD MOTOR. FAILURE TO FOLLOW THE INSTRUCTIONS AND SAFETY PRECAUTIONS IN THIS MANUAL CAN RESULT IN SERIOUS INJURY OR DEATH. KEEP THIS MANUAL IN A SAFE LOCATION FOR FUTURE REFERENCE.**

Copyright © 2018 Tohatsu Corporation. All rights reserved. No part of this manual may be reproduced or transmitted in any from or by any means without the express written permission of Tohatsu Corporation.

YOUR TOHATSU OUTBOARD MOTOR

ENOM00006-A

To You, Our Customer

Thank you for selecting a TOHATSU outboard motor. You are now the proud owner of an excellent outboard motor that will service you for many years to come.
This manual should be read in its entirety and the inspection and maintenance procedures described later in this manual should be followed carefully. Should a problem arise with the outboard motor, please follow the troubleshooting procedures listed at the end of this manual. If the problem persists, contact an authorized TOHATSU service shop or dealer.

All information in this manual is based on the latest product information available at the time of approval for printing.
Tohatsu Corporation reserves the right to make changes at any time without notice and without incurring any obligation.

Please always keep this manual together with the outboard motor as a reference to everyone who uses the outboard motor. If the outboard motor is resold, make sure the manual is passed on to the next owner.

We hope you will enjoy your outboard motor and wish you good luck in your boating adventures.

TOHATSU CORPORATION

ENOM00113-0

EC DECLARATION OF CONFORMITY (DoC)

This product conforms to certain portion of the European Parliament directive. DoC contains the following information;

- Name and Address of the manufacturer.
- Applied community directives
- Reference standard
- Description of the product. (Model name and serial number)
- Signature of the responsible person (Name / Title / Date and place of issue).

ENOM00002-0

OWNER REGISTRATION AND IDENTIFICATION

Upon purchasing this product, be sure that the WARRANTY CARD is correctly and completely filled out and mailed to the addressee noted there on. This WARRANTY CARD identifies you as the legal owner of the product and serves as your warranty registration.
TO THE EXTENT PERMITTED BY APPLICABLE LAW, YOUR OUTBOARD MOTOR WILL NOT BE COVERED BY THE APPLICABLE LIMITED WARRANTY, IF THIS PROCEDURE IS NOT FOLLOWED.

ENOM00003-0

PRE-DELIVERY CHECK

Be sure that the product has been checked by an authorized TOHATSU dealer before you take delivery.

ENOM00005-A

Serial Number

In the space below, please record the outboard motor's serial number (indicated both on the swivel bracket and on the cylinder block). The serial number will be needed when ordering parts, and when making technical or warranty inquiries.

Serial Number:

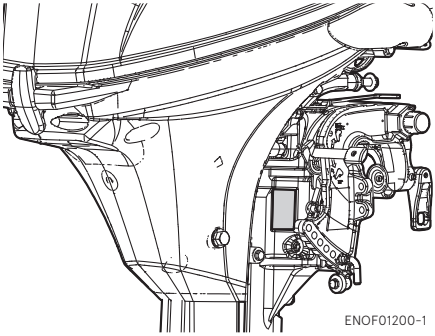

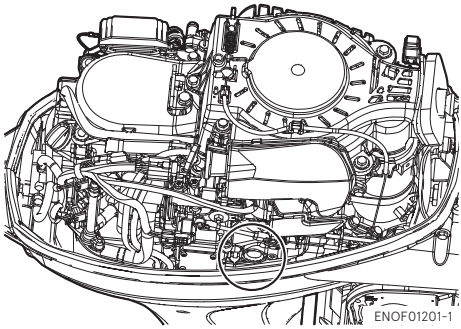

Serial Number: Date of purchase:

ENOM00007-0

NOTICE: DANGER/WARNING/CAUTION/Note

Before installing, operating or otherwise handling your outboard motor, be sure to thoroughly read and understand this Owner's Manual and carefully follow all of the instructions. Of particular importance is information preceded by the words "DANGER," "WARNING," "CAUTION," and "Note." Always pay special attention to such information to ensure safe operation of the outboard motor at all times.

ENOW00001-0

⚠ DANGER

Failure to observe will result in severe personal injury or death, and possibly property damage.

ENOW00002-0

⚠ WARNING

Failure to observe could result in severe personal injury or death, or property damage.

ENOW00003-0

⚠ CAUTION

Failure to observe could result in personal injury or property damage.

ENON00001-0

Note

This instruction provides special information to facilitate the use or maintenance of the outboard motor or to clarify important points.

CONTENTS

1. GENERAL SAFETY INFORMATION 10
2. SPECIFICATIONS 12
3. PARTS NAME 15
4. LABEL LOCATIONS 17
5. INSTALLATION 20
   1. Mounting the outboard motor on boat 20
   2. Remote control device installation 22
   3. Battery installation. 23
6. PRE-OPERATING PREPARATIONS 25
   1. Fuel handling 25
   2. Fuel filling 26
   3. Engine oil recommendation 27
   4. Break-In 29
   5. Warning system 30
7. ENGINE OPERATION 32
   Before starting 32
   1. Fuel feeding 32
   2. Starting the engine 33
   3. Warming up the engine 38
   4. Forward, reverse, and acceleration 38
   5. Stopping the engine 41
   6. Steering 43
   7. Trim angle 43
   8. Tilt up and tilt down 45
   9. Shallow water operation 48
8. REMOVING AND CARRYING THE OUTBOARD MOTOR. 50
   1. Removing the outboard motor 50
   2. Carrying the outboard motor 50
   3. Trailering 51
9. ADJUSTMENT. 53
   1. Steering friction 53
   2. Throttle grip friction 53
   3. Remote control lever friction 53
10. INSPECTION AND MAINTENANCE. 54
   1. Daily Inspection 55
   2. Periodic Inspection 60
   3. Off-season storage 72
   4. Pre-season check 75
   5. Submerged outboard motor 75
   6. Cold weather precautions. 76
   7. Striking underwater object 76
   8. Auxiliary outboard motor operation. 76

11. TROUBLESHOOTING 77
12. ACCESSORIES KIT 79
13. PROPELLER TABLE 80

INDEX

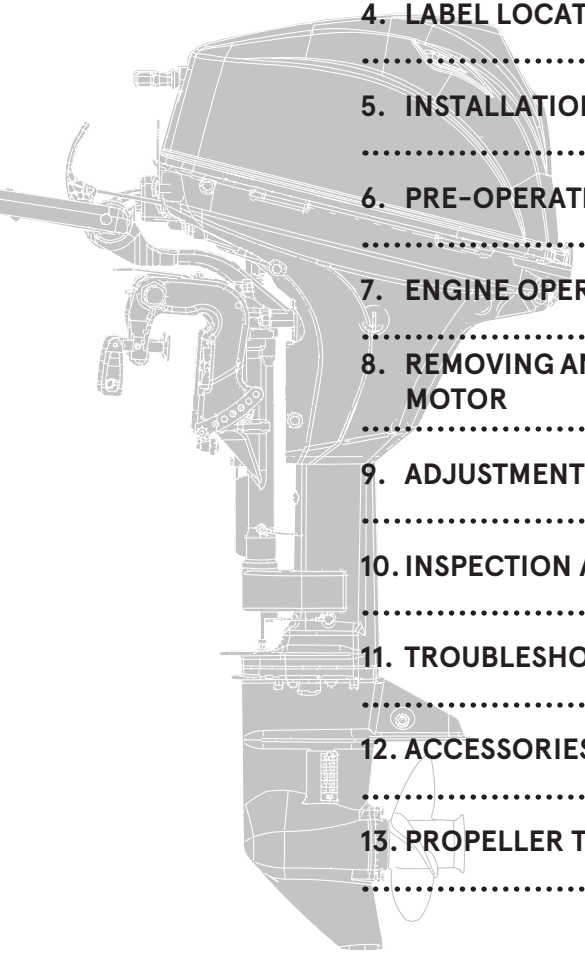

1. GENERAL SAFETY INFORMATION 1
2. SPECIFICATIONS 2
3. PARTS NAME 3
4. LABEL LOCATIONS 4
5. INSTALLATION 5
6. PRE-OPERATING PREPARATIONS 6
7. ENGINE OPERATION 7
8. REMOVING AND CARRYING THE OUTBOARD MOTOR 8
9. ADJUSTMENT 9
10. INSPECTION AND MAINTENANCE 10
11. TROUBLESHOOTING 11
12. ACCESSORIES KIT 12
13. PROPELLER TABLE 13

GENERAL SAFETY INFORMATION

ENOM00009-0

SAFE OPERATION OF BOAT

As the operator/driver of the boat, you are responsible for the safety of those aboard and those in other boat around yours, and for following local boating regulations. You should be thoroughly knowledgeable on how to correctly operate the boat, outboard motor, and accessories. To learn about the correct operation and maintenance of the outboard motor, please read through this manual carefully.

It is very difficult for a person standing or floating in the water to take evasive action should he or she see a power boat heading in his/her direction, even at a slow speed. Therefore, when your boat is in the immediate vicinity of people in the water, the outboard motor should be shifted to neutral and shut off.

ENOW00005-0

⚠ WARNING

SERIOUS INJURY IS LIKELY IF A PERSON IN THE WATER MAKES CONTACT WITH A MOVING BOAT, GEAR HOUSING, PROPELLER, OR ANY SOLID DEVICE RIGIDLY ATTACHED TO A BOAT OR GEAR HOUSING.

ENOM0008-A

EMERGENCY STOP SWITCH

The Emergency Stop Switch will stall the outboard motor when the stop switch lanyard is pulled off. This stop switch lanyard has to be attached to the operator of the outboard motor to minimize or prevent injuries from the propeller in case the operator falls overboard.

It is operator's responsibility to use the Emergency Stop Switch Lanyard.

ENOW00004-A

⚠ WARNING

Accidental activation of the Emergency Stop Switch (such as the tether being pulled out in heavy seas) could cause passengers to lose their balance and even fall overboard, or it could result in loss of power in heavy seas, strong currents, or high winds. Loss of control while mooring is another potential hazard.

To minimize accidental activation of the Emergency Stop Switch, the 500 mm (20 in.) stop switch lanyard is coiled and can extended to a full 1300 mm (51 in.).

ENOM00800-A

PERSONAL FLOATATION DEVICE

As the operator/driver and passenger of the boat, you are responsible to wear a PFD (Personal Flotation Device) while on the boat.

ENOM00010-0

SERVICING, REPLACEMENT PARTS & LUBRICANTS

We recommend that only an authorized service shop perform service or maintenance on this outboard motor. Be sure to use genuine parts, genuine lubricants, or recommended lubricants.

ENOM00011-A

MAINTENANCE

As the owner of this outboard motor, you should be acquainted with correct maintenance procedures following maintenance section of this manual (See page 54). It is the operator's responsibility to perform all safety checks and to ensure that all lubrication and maintenance instructions are complied with for safe operation. Please comply with all instructions concerning lubrication and maintenance. You should take the engine to an authorized dealer or service shop for periodic inspection at the prescribed intervals. Correct periodic maintenance and proper care of this outboard motor will reduce the chance of problems and limit overall operating expenses.

Carbon Monoxide Poisoning Hazard

Exhaust gas contains carbon monoxide, a colorless and odorless gas which can be fatal if inhaled for any length of time.
Never start or operate the engine indoors or in any space which is not well ventilated.

Gasoline

Gasoline and its vapors are very flammable and can be explosive. Use extreme care when handling gasoline. You should be thoroughly knowledgeable on how to correctly handle gasoline by reading this manual.

SPECIFICATIONS

ENOM00810-A

MODEL FEATURE

Model		F9.9E		F15E				F20E				
Type		MF	EP	MF	EF	EP	EPT	MF	EF	EFT	EP	EPT
Transom heights	S	●	●	●	●	●	●	●	●	●	●	●
	L	●	●	●	●	●	●	●	●	●	●	●
Tiller Handle		●		●	●			●	●	●		
Remote Control			●			●	●				●	●
Power Tilt							●			●		●
Manual Tilt		●	●	●	●	●		●	●		●	

ENOM00811-A

MODEL NAME EXAMPLE

F 20E EPTL

F	20	E	E	P	T	L
Model description	Horse power	Product generation	Starter system	Steering system	Tilt system	Shaft length
F= Four stroke D= Two stroke DI	-	A and up	E= Electrical start M= Manual start	P= Remote Control (Plea-sure) F= Tiller handle (Fisher)	T= Power trim&tilt Blank= Manual tilt	S= Short 15 in L= Long 20 in UL= Ultra long 25 in

ENOM00301-0

MF, EF, EFT

Item	MODEL	F9.9E/15E/20E		
		MF	EF	EFT
Overall Length	mm (in)	1038 (40.9)		
Overall Width	mm (in)	343 (13.5)		339 (13.3)
Overall Height S·L·UL	mm (in)	1116 (43.9) 1258 (49.5) 1386 (54.5)		
Transom Height S·L·UL	mm (in)	413 (16.3) 562 (22.1) 689 (27.1)		
Weight*1	S kg (lb)	43 (95)	47 (104)	52.5 (116)
	L kg (lb)	44 (97)	48 (106)	53.5 (118)
	UL kg (lb)	45.5 (100)	49.5 (109)	55 (121)
Output	kW (ps)	9.9E : 7.3 (9.9) 15E : 11.0 (15) 20E : 14.7 (20)		
Max. Operating Range	min^{-1} (rpm)	5400-6100		
Idle Speed in Forward Gear	min^{-1} (rpm)	950		
Idle Speed in Neutral Gear	min^{-1} (rpm)	950		
Engine Type		4-Stroke FI		
Number of Cylinder		2		
Bore × Stroke	mm (in)	61 × 57 (2.40 × 2.24)		
Piston Displacement	cm^3 (Cu in)	333 (20.32)		
Exhaust System		Through hub exhaust		
Cooling System		Water cooling		
Engine Lubrication		Trochoid pump		
Starting System		Manual	Electric starter motor*2	
Ignition System		Flywheel Magneto C.D. ignition		
Spark Plug		NGK DCPR6E		
Trim Position		6		5
Engine Oil	mL (fl.oz.)	API, SH, SJ or SL SAE 10W-30/40, Approx. 1000 (33.8)		
Gear Oil	mL (fl.oz.)	Genuine Gear Oil or API GL5, SAE #80-90, Approx. 465 (15.7)		
Fuel		Unleaded Regular Gasoline : R+M/2: 87 or higher RON: 91 or higher		
Fuel Tank Capacity	L (US gal)	12 (3.17)		
Gear Reduction Ratio		2.15 (13 : 28)		
Emission Control System		MFI (Multiport Fuel Injection)		
Operator Sound Pressure (ICOMIA 39/94) dB (A)		84.2		
Hand Vibration Level (ICOMIA 38/94) m/s^2		2.5		

Remark: Specifications subject to change without notice.

*1 With propeller, with battery cable.

*2 With Manual Start

Tohatsu outboard is power rated in accordance with ISO8665 (propeller shaft output).

ENOM00302-0

EP, EPT

Item	MODEL	F9.9E/15E/20E	
		EP	EPT
Overall Length	mm (in)	629 (24.7)	
Overall Width	mm (in)	343 (13.5)	339 (13.3)
Overall Height S·L·UL	mm (in)	1116 (43.9) 1258 (49.5) 1386 (54.5)	
Transom Height S·L·UL	mm (in)	413 (16.3) 562 (22.1) 689 (27.1)	
Weight	S kg (lb)	46 (101)	51.5 (114)
	L kg (lb)	47 (104)	52.5 (116)
	UL kg (lb)	48.5 (107)	54 (119)
Output	kW (ps)	9.9E : 7.3(9.9) 15E: 11.0 (15) 20E: 14.7 (20)	
Max. Operating Range	min^{-1} (rpm)	5400-6100	
Idle Speed in Forward Gear	min^{-1} (rpm)	950	
Idle Speed in Neutral Gear	min^{-1} (rpm)	950	
Engine Type		4-Stroke FI	
Number of Cylinder		2	
Bore × Stroke	mm (in)	61 × 57 (2.40 × 2.24)	
Piston Displacement	cm^3 (Cu in)	333 (20.32)	
Exhaust System		Through hub exhaust	
Cooling System		Water cooling	
Engine Lubrication		Trochoid pump	
Starting System		Electric starter motor*2	
Ignition System		Flywheel Magneto C.D. ignition	
Spark Plug		NGK DCPR6E	
Trim Position		6	5
Engine Oil	mL (fl.oz.)	API, SH, SJ or SL SAE 10W-30/40, Approx. 1000 (33.8)	
Gear Oil	mL (fl.oz.)	Genuine Gear Oil or API GL5, SAE #80-90, Approx. 465 (15.7)	
Fuel		Unleaded regular gasoline : R+M/2: 87 or higher RON: 91 or higher	
Fuel Tank Capacity	L (US gal)	12 (3.17)	
Gear Reduction Ratio		2.15 (13 : 28)	
Emission Control System		MFI (Multiport Fuel Injection)	
Operator Sound Pressure (ICOMIA 39/94) dB (A)		84.2	
Hand Vibration Level (ICOMIA 38/94) m/s^2		–	

Remark: Specifications subject to change without notice.
*1 With propeller, with battery cable.
*2 With Manual Start
Tohatsu outboard is power rated in accordance with ISO8665 (propeller shaft output).

PARTS NAME

ENOM00303-0

MF, EF, EP, EFT, EPT

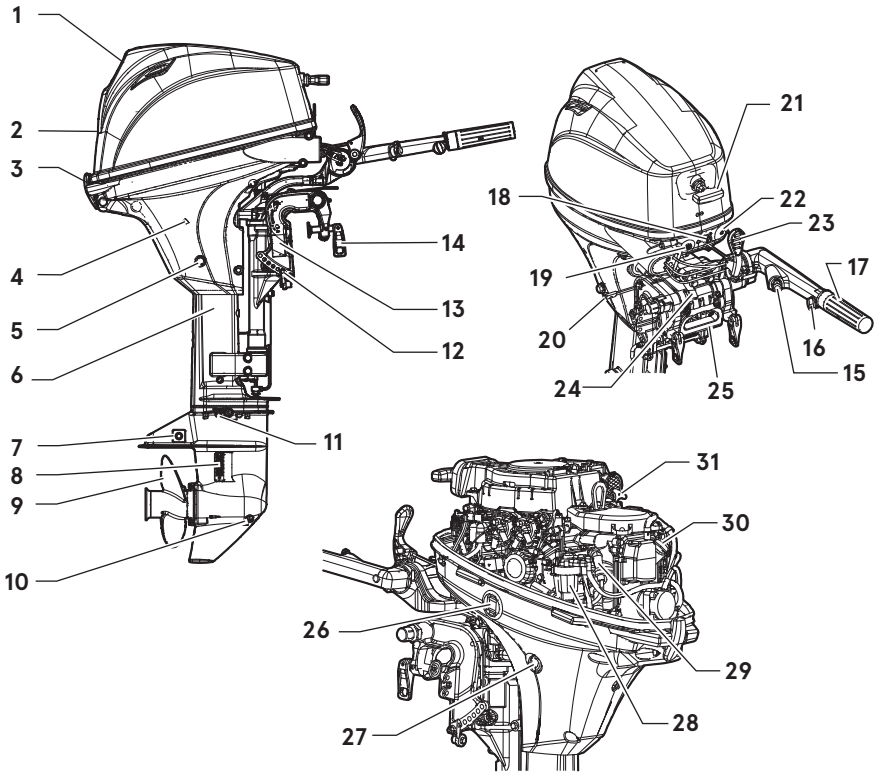

ENOF01202-1

1 Tilt Handle
2 Top Cowl
3 Bottom Cowl
4 Cooling Water Check Port
5 Oil Drain Bolt
6 Drive Shaft Housing
7 Anode
8 Water Inlet
9 Propeller
10 Oil Plug (Lower) (Fill)
11 Oil Plug (Upper) (Level)
12 Thrust Rod
13 Clamp Bracket
14 Clamp Screw
15 Stop Switch*1
16 Throttle Friction Screw*1
17 Throttle Grip*1
18 Warning Lamp
19 Starter Switch*2
20 Reverse Lock Lever
21 Starter Handle
22 Fuel Connector
23 Shift Lever*1
24 Steering Friction Lever
25 Carrying Handle
26 Power Tilt Switch (EPT type only)
27 Flushing Connector Cap
28 Fuel Filter
29 Spark Plug
30 Oil Filler Cap
31 Oil Level Gauge

*1: Tiller handle type only.
*2: Electrical starter type only.

MF, EF, EP, EFT, EPT

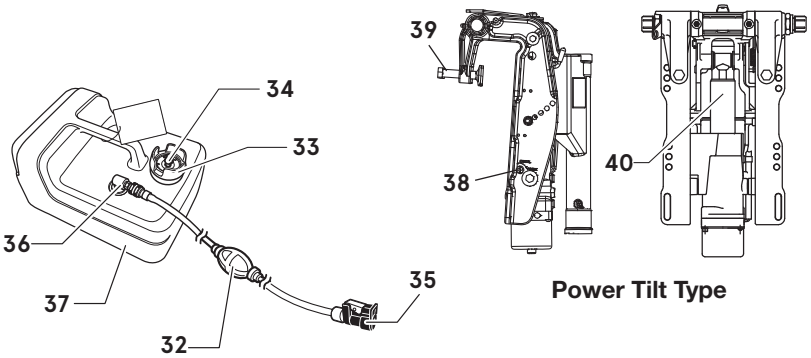

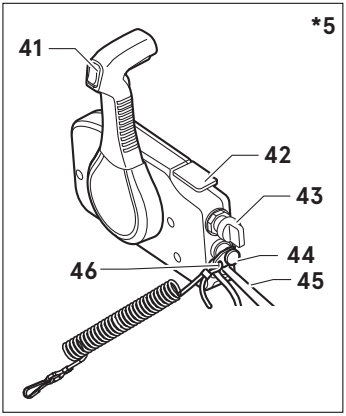

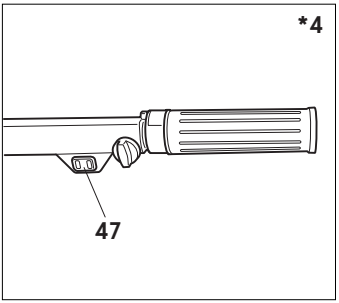

ENOF01203-2

32 Primer Bulb
33 Fuel Tank Cap
34 Air Vent Screw
35 Fuel Connector
36 Fuel Pick up Elbow
37 Fuel Tank
38 Manual Release Valve *3
39 Clamp Screw *4
40 Power Tilt *3
41 Power Tilt Switch *5
42 Remote Control Box *5
43 Main Switch *5
44 Stop Switch *5
45 Cord Assembly *5
46 Engine Stop Switch Cord *5
47 Power Tilt Switch

*3: Power tilt type only.
*4: Power tilt, tiller handle type only.
*5: Remote control type only.

LABEL LOCATIONS

ENOM00019-A

Warning label locations

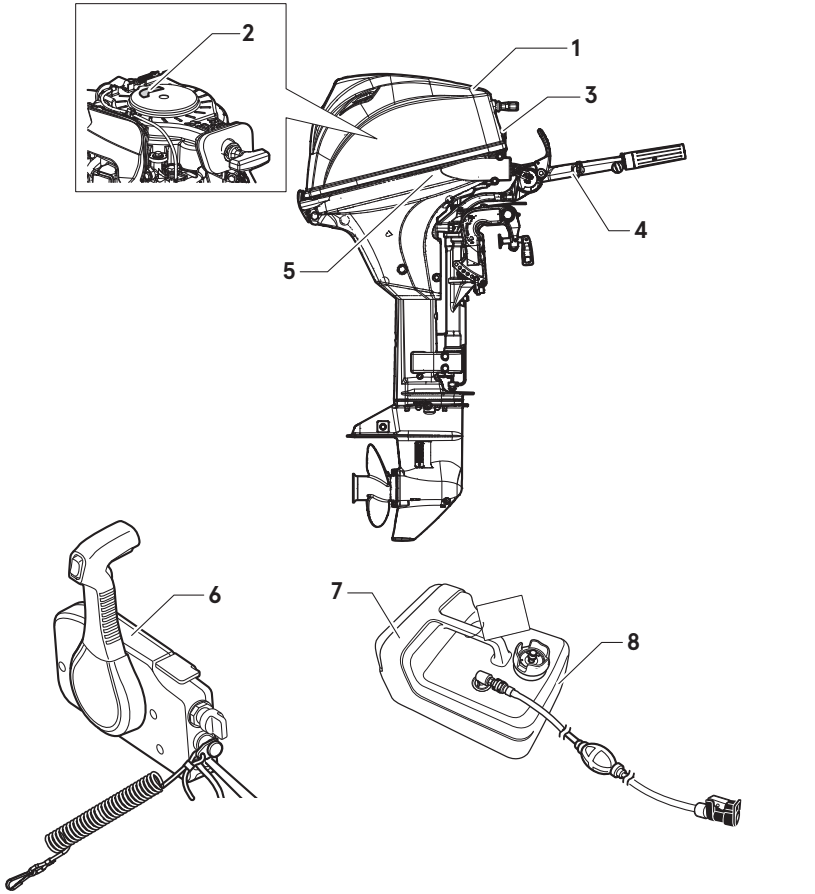

ENOF01204-3

1. Warning label urge to read the owner's manual .

ENOF00120-0

2-1. Warning regarding emergency starting (See page 36).

2-2. Warning regarding high temperature.

2-3. Warning regarding rotating object.

2-4. Warning regarding high voltage

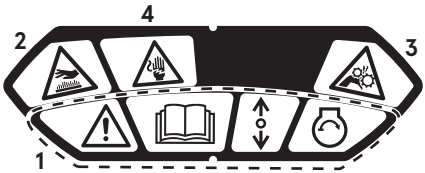

3PA-72181-100

3. Warning label regarding engine failure/ malfunction (See page 30).

ENOF00130-0

4. Warning label regarding stop switch (See page 34, 35, 42

ENOF00131-B

5. Warning label regarding position of outboard motor when setting down.

ENOF00006-0

For RC model

6. Warning label regarding stop switch lanyard.

ENOF00005-D

7. Warning regarding gasoline (See page 26).

REMOVE FROM BOAT
FOR FILLING

ENOF00005-S

8. Warning regarding gasoline (See page 26).

ENOF00005-L

ENOM00019-B

CE label locations

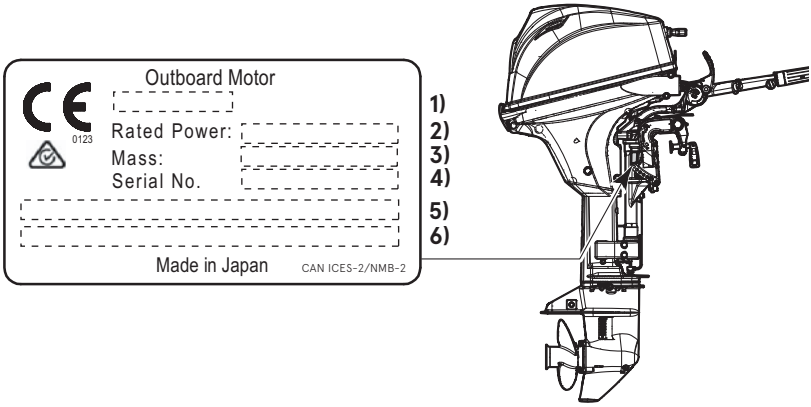

ENOF01237-3

1) Model code (Model name)
2) Rated power
3) Dry mass weight (Without propeller, with battery cable)
4) Serial No.
5) Manufacturer name
6) Manufacturer address

Description of serial number year code

Last two digits of alphabet represent production year as below.

Year Code	AG	AH	AK	BX	BA
Year of manufacture	2017	2018	2019	2020	2021

INSTALLATION

ENOM00024-C

1. Mounting the outboard motor on boat

ENOW00006-B

⚠ WARNING

Before installing the outboard motor on the boat, hang the outboard motor with the hoist or equivalent device by attaching the engine hanger to the outboard. Use the hoist with allowable load is 150 kg (330 lbs) or above.

ENOW00006-0

⚠ WARNING

Most boats are rated and certified in terms of their maximum allowable horsepower, as shown on the boat's certification plate. Do not equip your boat with an outboard motor that exceeds this limit. If in doubt, contact your dealer.
Do not operate the outboard motor until it has been securely mounted on the boat in accordance with the instructions below.

ENOW00009-0

⚠ WARNING

- **Mounting the outboard motor without following this manual can lead to unsafe conditions such as poor maneuverability, lack of control or fire.**
- **Loose clamp screws and/or mounting bolts can lead to the release or displacement of the outboard motor, possibly resulting in lost of control and/or serious personal injury. Be sure that fasteners are tightened to the specified torque (30 N·m (3.0 kgf·m) 13 ft·lb). Check the fasteners for tightness from time to time.**
- **Be sure to use outboard mounting fasteners included in the outboard motor package or their equivalents in terms of size, material, quality and strength. Tighten fasteners to the specified torque (30 N·m (3.0 kgf·m) 13 ft·lb). Test cruise to check if fasteners are tightened securely.**
- **Outboard motor mounting must be performed by trained service person(s) using lift or hoist with sufficient capacity.**

Outboard motor mounting must be performed by trained service person(s) using lift or hoist with sufficient capacity.

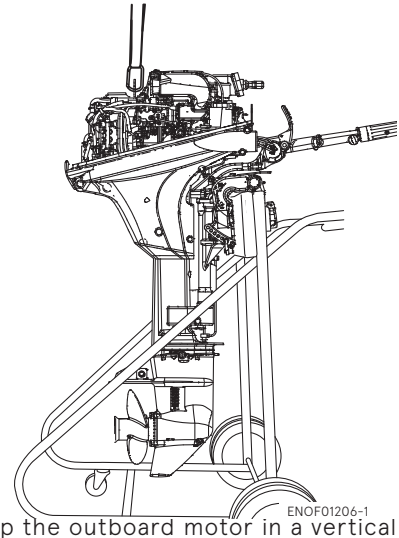

ENOF01206-1

Keep the outboard motor in a vertical position when mounting.

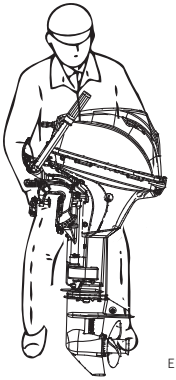

ENOF01239-0

ENOM00025-0

Position ... Above keel line

Set engine at center of boat.

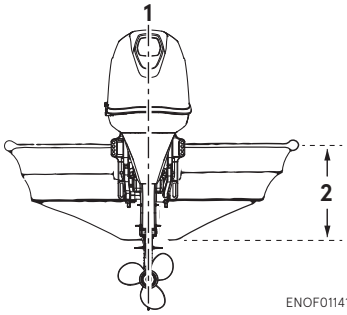

1. Center of boat
2. Boat transom

ENOM00026-0

Transom matching

Be sure that the anti ventilation plate of the outboard motor is 5–25 mm (0.2–1 in) below the bottom of hull.
If the above condition cannot be met due to the shape of the bottom of your boat, please consult your authorized dealer.

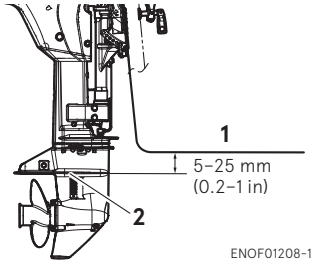

1. Bottom of hull
2. Anti ventilation plate

ENOW00007-0

⚠ CAUTION

- **Before beginning the running test, check that the boat with maximum capacity loading floats on the water in a proper attitude. Check the position of water surface on the driveshaft housing. If the water surface is near the bottom cowling, in high waves, water may enter the engine cylinders.**
- **Incorrect outboard motor mounting height or existence of underwater object(s), such as hull bottom design, bottom surface conditions or underwater accessories, can cause water spray possibly reaching the engine through an opening of the bottom cowling during cruising. Exposing the engine to such conditions for extended periods can lead to severe engine damage.**

ENOM00830-A

Mounting bolts

Manual tilt type

1. To attach the outboard motor to the boat, tighten the clamp screws by turning their handles.
   Also, use the bolts to secure the outboard motor brackets on transom board.
   Secure the outboard motor with a rope to prevent loss overboard.

ENON00002-0

Note

A rope is not included in the standard accessories.

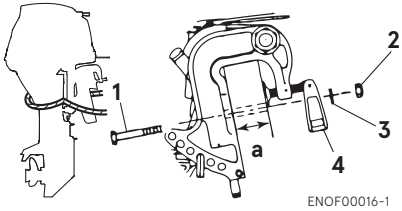

1. Bolt (8 × 85)
2. Nut
3. Washer
4. Clamp screw

a. 40 - 60 mm

ENOW00945-0

⚠ CAUTION

- **Please inspect whether there is a loosening of the clamp screw or mounting bolts before departure.**
- **Loosening may cause a dangerous situation, such as loss of control.**

5

PT type

1. To attach the outboard motor to the boat, use the bolts to secure the outboard motor brackets on transom board.

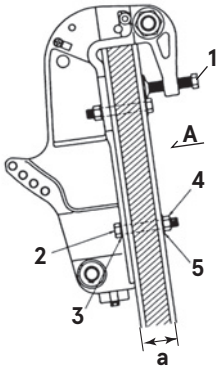

ENOF00308-1

1. Bolt (8 × 85)
2. Washer (small diameter)
3. Nut
4. Washer (large diameter)
a. 30 - 63 mm

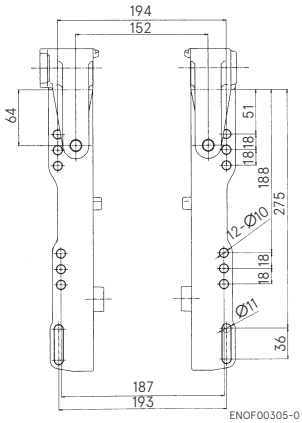

ENOF00305-0

View A

ENOW00008-A

⚠ CAUTION

- **Mounting bolts should be installed with the bolt head at inside surface of the transom. Mounting bolts installed with the threaded end at the inside surface of the transom can cause personal injury.**
- **Tighten the bolts sufficiency, otherwise falling down of outboard could be happened.**

ENON00003-A

Notes

1. Apply sealing material, such as silicone sealed between the bolts and the transom board holes before tightening the bolts.
2. Be sure to tighten the mounting bolt nuts to the specified torque.
   (30 N·m (3.0 kgf·m) 13 ft·lb)

ENOM00840-0

2. Remote control device installation

ENOW00100-B

⚠ CAUTION

Be careful not to loop the remote control cables to a diameter of 406 mm (16 in) or less. Otherwise, it affects the durability of the cable.

ENOW00850-0

Remote control box location

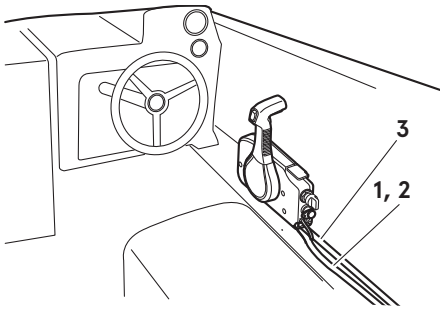

ENOF00841-1

1. Shift cable
2. Throttle cable
3. Cable harness B

Install the remote control box in a position where it is easy to reach and operate the controls.
Make sure there are no obstacles that can interfere with the operation of the remote control cable.

ENOW00850-0

Remote control cable length

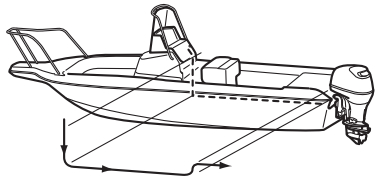

ENOF00842-0

Measure the distance from the remote control box to the outboard motor where the remote control cable should be routed.
Prepare a cable that is 300-450mm (11.8-17.7in) longer than the measured distance.
Temporarily pull the cable along the intended cable route to check its length is sufficient.
Connect the remote control cable to the engine, then run the cable to the remote control box, making sure it is not sharply bent, too taut and free from obstructions that could interfere with steering.

ENOM00029-A

3. Battery installation

ENOW00012-A

⚠ WARNING

Battery electrolyte contains sulfuric acid and thus is hazardous, causing a burn if it comes in contact with your skin, or poisonous if swallowed.
Keep battery and electrolyte away from reach of children
When handling the battery, be sure to:
- **Read all warnings shown on the battery.**
- **Prevent electrolyte in contact with of your body. Contact can cause serious burn or, loss of sight. Use safety glasses and rubber gloves.**

In case battery electrolyte comes in contact with:
- **Skin, flush thoroughly with water.**
- **Eye, flush thoroughly with water, and then seek immediate medical treatment.**

In case battery electrolyte is swallowed:
- **Seek immediate medical treatment.**

ENOW00013-B

⚠ WARNING

Battery generates explosive hydrogen gas. Be sure to:
- **Charge the battery in a well-ventilated place.**
- **Place the battery away from any source of fire, sparks and open flames such as burners or welding equipment.**
- **Do not smoke near the battery.**
- **Do not charge the battery when the electrolyte level is low. Otherwise, the battery will be damaged and may cause malfunction.**

ENOW00014-0

⚠ CAUTION

- **Make sure that the battery leads do not get stuck between the outboard motor and boat when turning, etc.**
- **The starter motor may fail to operate if the leads are incorrectly connected.**
- **Be sure to correctly connect the (+) and (—) leads. If not, the charging system will be damaged.**
- **Do not disconnect the battery leads from battery while the engine is operating, the electrical parts could be damaged.**
- **Always use a fully charged battery.**

ENOW00015-0

⚠ CAUTION

Do not use a battery that is not recommended. Use of a battery not recommended can lead to poor performance of, and/or damage to, the electrical system.

ENON00006-A

Note

Recommended battery: 12V 40Ah/5HR, 350 (Cold Cranking Amps (CCA), In case of cold whether: 12V70Ah/5HR (650CCA)) Specifications and features of batteries vary among the manufacturers. Consult the manufacturer for details.
* The battery should be purchased separately and is not supplied with the outboard motor.

1. Place the battery box in a convenient position away from possible water spray. Securely fasten both the box and the battery so they do not shake loose.
2. Connect the positive lead (+) to the positive terminal (+) of the battery, and then connect the negative lead (—). When disconnecting the battery always remove the negative lead (—) first. After connecting the positive terminal (+), securely place a cap on it to prevent short circuits.

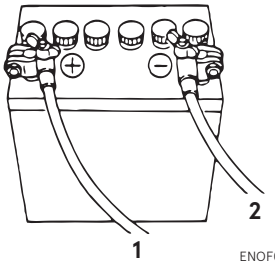

ENOF00022-0

1. Battery cord (red)
2. Battery cord (black)

PRE-OPERATING PREPARATIONS

ENOM00030-A

1. Fuel handling

ENOW000017-0

⚠ CAUTION

Use of improper gasoline can damage your engine. Engine damage resulting from the use of improper gasoline is considered misuse of the engine, and damage caused thereby will not be covered under the limited warranty.

ENOM00031-A

FUEL RATING

TOHATSU engines will operate satisfactorily when using a major brand of unleaded gasoline meeting the following specifications:

USA and Canada – having a posted pump Octane Rating of 87 (R+M)/2 minimum. Premium gasoline (92 [R+M]/2 Octane) is also acceptable. Do not use leaded gasoline.

Outside USA and Canada – Use unleaded gasoline with declared octane rating of 91 RON or over. Use of premium gasoline of 98 RON is also allowed.

ENOM00032-A

GASOLINES CONTAINING ALCOHOL

The fuel system components on your TOHATSU engine will withstand up to 10% ethyl alcohol (hereinafter referred to as the "ethanol"), content in the gasoline. But even if the gasoline in your area contains ethanol less than 10%, you should be aware of certain adverse effects that can occur. Increasing the percentage of ethanol in the fuel can also worsen these adverse effects. Some of these adverse effects are caused because the ethanol in the gasoline can absorb moisture from the air, resulting in a separation of the water/ethanol from the gasoline in the fuel tank.

These may cause increased:

- Corrosion of metal parts
- Deterioration of rubber or plastic parts
- Fuel permeation through rubber fuel lines
- Starting and operating difficulties

If the use of gasoline containing alcohol is inevitable, or presence of alcohol is suspected in the gasoline, it is recommended to add a filter that has water separating capability, and check the fuel system for leaks and mechanical parts for corrosion and abnormal wear more frequently.

And, in case any of such abnormality is found, discontinue the use of such gasoline and contact our dealer immediately.

If the outboard motor will only be used infrequently, please see the remarks on fuel deterioration in the STORAGE chapter (P 72) for additional information.

ENOW00020-1

⚠ CAUTION

When operating a TOHATSU engine on gasoline containing alcohol, storage of gasoline in the fuel tank for long periods should be avoided. Long periods of storage, create unique problems. In cars, alcohol blend fuels normally are consumed before they can absorb enough moisture to cause trouble, but boats often sit idle long enough for phase separation to take place. In addition, internal corrosion may take place during

storage if alcohol has washed protective oil films from internal components.

ENOW00018-0

⚠ WARNING

Fuel leakage can cause fire or explosion, potentially leading to severe injury or loss of life. Every fuel system part should be checked periodically, and especially after long term storage, for fuel leak, change of hardness of rubber, expansion and/or corrosion of metals. In case any indication of fuel leakage or degradation of fuel part is found, replace relevant part immediately before continuing operation.

ENOW00019-1

⚠ WARNING

Do not fill the fuel tank over capacity. The rise of gasoline temperature may cause gasoline to expand which, may leak through air vent screw when it is open. Leaking gasoline is a dangerous fire hazard.

ENOM00043-B

2. Fuel filling

ENOW00028-A

⚠ WARNING

Consult an authorized dealer for details on handling gasoline, if necessary.

Gasoline and its vapors are very flammable and can be explosive.

When carrying a fuel tank containing gasoline:

- **Close the fuel tank cap and air vent screw of fuel tank cap, or gasoline vapor will be emitted through the air vent screw, creating a fire hazard.**
- **Do not smoke.**

When or before refueling:

- **Be sure to remove the static electricity charged in your body before refueling.**
- **The sparks due to static electricity may cause explosion of flammable gasoline.**
- **Stop the engine, and do not start the engine during refueling.**
- **Do not smoke.**
- **Be careful not to overfill fuel tank. Wipe up any spilled gasoline immediately.**

When or before cleaning the gasoline tank:

- **Dismount fuel tank from the boat.**
- **Place the fuel tank away from every source of ignition, such as sparks or open flames.**
- **Do the work outdoors or in a well ventilated area.**
- **Wipe off gasoline well immediately if spilled.**
-

After cleaning gasoline tank:

- **Wipe off gasoline well immediately if spilled.**
- **If the fuel tank is disassembled for cleaning, reassemble carefully. Imperfect assembly may cause a fuel leak, possibly leading to fire or explosion.**
- **Dispose aged or contaminated gasoline in accordance with local regulations.**

EENOW00029-A

⚠ WARNING

When opening fuel tank cap, be sure to follow the procedure described below. Fuel could blast out through the fuel tank cap in case the cap is loosened by using another procedure when internal pressure of fuel tank is raised by heat from sources such as sun light.

ENOW00946-0

⚠ CAUTION

Separate tank must be fixed at appropriate position so that well ventilated and tank does not move or fall down while operating.

1. Full open the air vent screw on the tank cap and release internal pressure.

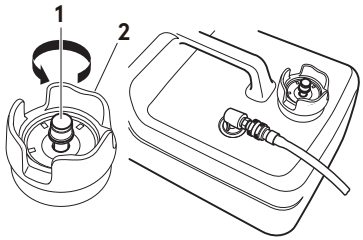

ENOF00417-0

1. Air vent screw
2. Tank cap

2. Open the fuel tank cap slowly.
3. Fill the fuel carefully not to over flow.

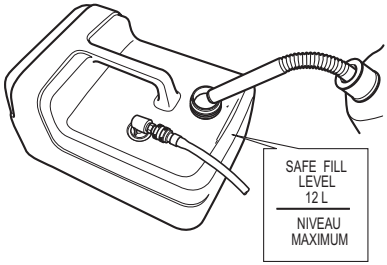

ENOF00419-A

4. After filling the tank, close the fuel tank cap.

ENOM00037-A

3. Engine oil recommendation

ENOW00022-A

⚠ CAUTION

The engine oil is drained for shipping from the factory. Be sure to fill the engine to the proper level before starting engine. (To properly fill the engine with oil follow the instructions, See page 61)

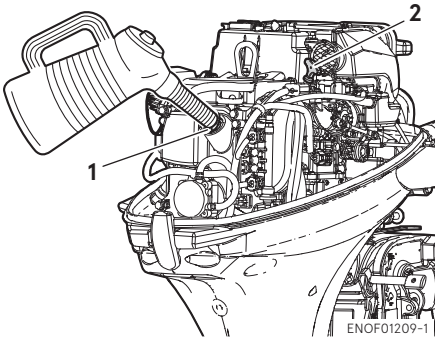

ENOF01209-1

1. Filler port
2. Dipstick

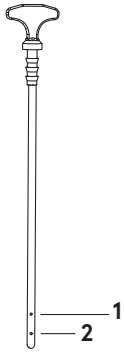

ENOF01240-0

1. Upper level
2. Lower level

Use only high quality 4-stroke engine oil to insure performance and prolonged engine life.
The SAE oil viscosity 10W-30 or 10W-40 FC-W outboard motor engine oil is recommended.
You can also use oils that carry the API rating of SH, SJ, or SL. Select the appropriate viscosity, based on atmospheric temperature, from the chart below.

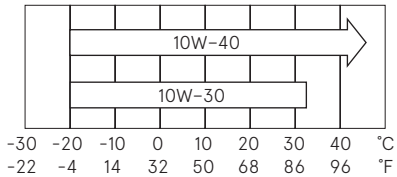

ENOF00208-0

ENOW0002A-A

⚠ CAUTION

Use of engine oils that do not meet these requirements will result in reduced engine life, and other engine problems.

]ENOM00033-A

4. Break-In

Your new outboard motor and lower unit require break-in for the moving components according to the conditions described in the following time table.
Please refer to ENGINE OPERATION section (See page 32) to learn how to correctly start and operate the outboard motor.

ENOW00024-A

⚠ DANGER

Do not operate the outboard motor in closed area or area with no forced ventilation.
Exhaust gas emitted by this outboard motor contains carbon monoxide that will cause death if inhaled continuously. Inhaling the gas initially causes symptoms such as feeling of sickness, drowsiness and headache.
During operation of the outboard motor:

- **Keep peripheral area well ventilated.**
- **Always attempt to stay on the windward side of emission.**

ENOW00023-1

⚠ CAUTION

Operating the outboard motor without break-in can shorten service life.
If any abnormality is experienced during the break-in:

- **Discontinue the operation immediately.**
- **Have the dealer check the product and take proper action(s) if necessary.**

ENON00008-0

Note

Proper break-in allows outboard motor to deliver it full performance for longer service life.

	1–10 min	10 min – 2 hrs	2–3 hrs	3–10 hrs	After 10 hrs
Throttle Position	Idle	Less than 1/2 throttle	Less than 3/4 throttle	3/4 throttle	Full throttle available
Speed		Approx. 3000 min^{-1} (rpm) max	Full throttle run allowed for 1 min every 10 min	Approx. 4000 min^{-1} (rpm). Full throttle run allowed for 2 min every 10 min	

ENOM00039-D

5. Warning system

If outboard motor encounters an abnormal condition of fault, the warning buzzer will emit a continuous beep or intermittent short beeps and the warning lamp will synchronize with the buzzer and engine speed will be limited (engine will not be stopped).
*No buzzer is located for tiler handle type and EP type on the motor.
See next page for conditions which will lead to an abnormal condition or fault.

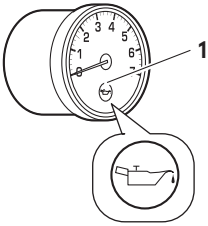

ENOF00851-A

1. Warning lamp

ENOM00040-1

Location of warning buzzer and lamp

■ **Warning buzzer**

RC model: Located inside the remote control.
Tiller handle model: No warning buzzer.

■ **Warning lamp**

RC model: Located in the tachometer & bottom cowl.
Tiller handle models:Located on the bottom cowl.

ENON00009-A

Note

Warning lamp for optional tachometer will synchronize with the warning lamp for engine side.

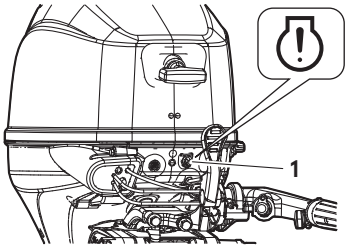

ENOF00314-A2

1. Warning lamp

ENOM00041-B

Warning indicators, faults and remedy

Warning indicators				Description of faults	Remedy
Sound	Lamp (LED)	Low speed ESG	High speed ESG		
One beep	On for 5 sec.			Normal system test when start up	
Continuous	ON		ON	Engine speed exceeds maximum allowable RPM	1
Continuous*2	ON*2	ON*2		Low oil pressure*1	2
Continuous	ON	ON		Water over temperature	3
Intermittent short beep*2	Blinking*2	ON*2		Water temp or MAP sensor out of range	4

Remarks

*1: In this case, oil pressure switch is "ON".

*2: It is necessary to stop the engine, if you want to stop the working indicators and re-set the warning system.

6

High speed ESG (Electronic Safety Governor)

High speed ESG is a device to prevent over revolution of the engine. If the load to the engine is reduced for some reason, it runs at a higher speed than the usual. In such the case, the buzzer sounds and the ESG is activated not to ignite the spark plug, therefore, the engine speed varies and be controlled under 6300 min^{-1} (rpm).

Low speed ESG

Low speed ESG is a device to prevent the engine from getting damage. If the engine has problems regarding cooling water, oil pressure, and sensors, the low speed ESG is activated not to ignite the spark plug, and disable fueling, therefore the engine speed varies and be controlled under 2800 min^{-1} (rpm).

Remedy

1. Reduce the throttle to less than half opening, and move to safe place quickly, and stop the engine.
   Check the propeller for bent or damaged blades.
   Consult an authorized dealer if engine shows the same result even after replacing propeller with new one.
2. Move to safe place quickly, and stop the engine.
   Check the engine oil level, and add engine oil if necessary.
   Consult your dealer if the engine oil level is too low or too high.
3. Move to safe place quickly, and check the discharge of cooling water from the water check port at idle speed and stop engine.
   Remove any foreign matter on the gear case and propeller if necessary.
   Consult an authorized dealer if no discharge of cooling water.
4. Consult an authorized dealer.

ENOW00025-B

⚠ CAUTION

- **Low speed ESG ON: Engine speed will be limited under 2800 min^{-1} (rpm), however you should not continue to run engine.**
- **High speed ESG ON: Engine speed will be limited to 6300 min^{-1} (rpm) and engine will run rough until throttle is reduced.**

ENOM00042-0

Before starting

ENOW00022-A

⚠ CAUTION

The engine oil is drained for shipping from the factory. Be sure to fill the engine to the proper level before starting engine. (To properly fill the engine with oil follow the instructions. See page 61)

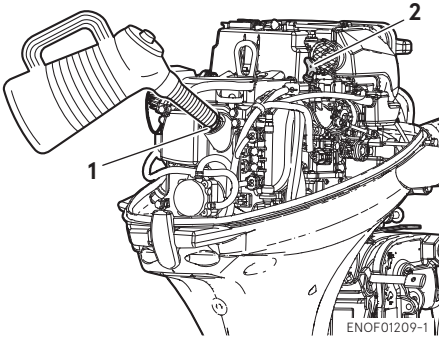

1. Filler port
2. Dipstick

ENOW00027-A

⚠ CAUTION

Before starting engine for the first time after reassembling engine or off-season storage, disconnect stop switch lock and crank approximately 10 times in order to prime the oil pump.

ENOM00044-C

1. Fuel feeding

ENOW00029-A

⚠ WARNING

When opening fuel tank cap, be sure to follow the procedure described below. Fuel could blast out through the fuel tank cap in case the cap is loosened by using another procedure when internal pressure of fuel tank is raised by heat from sources such as sun light.

ENOW00947-0

⚠ CAUTION

When using a separate tank, be sure that the fuel line is not kinked and is connected securely.

1. Full open the air vent screw on the tank cap.

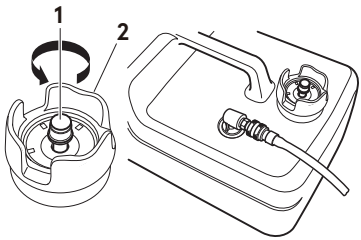

1. Air vent screw
2. Fuel tank cap

2. Open the fuel tank cap slowly and release internal pressure completely. After that, close the fuel tank cap.
3. Connect the fuel connector to the engine and fuel tank.

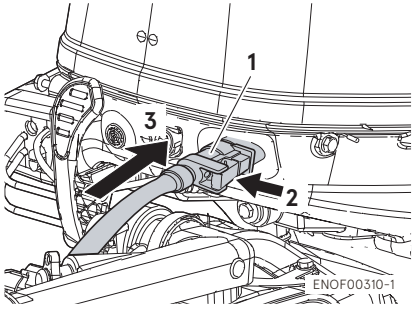

1. Fuel connector
2. Push
3. Insert

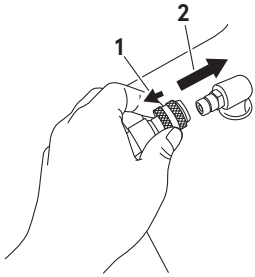

ENOF00861-A

1. Pull
2. Insert

4. Squeeze primer bulb until it becomes stiff to feed fuel to vapor separator Direct arrow mark upward when priming.

ENOF00862-0

1. Engine side
2. Fuel tank side

Do not squeeze primer bulb with engine running or when the outboard motor is tilted up. Otherwise, fuel could overflow.

ENOM00045-F

2. Starting the engine

ENOW00036-A

⚠ CAUTION

When the engine is started in the test tank, to avoid over heating and water pump damage, be sure the water level is at least 10 cm (4 in.) above the anti ventilation plate.
And be sure to remove the propeller, when starting the engine in the test tank. (See page 66)
Run the engine only at idling.

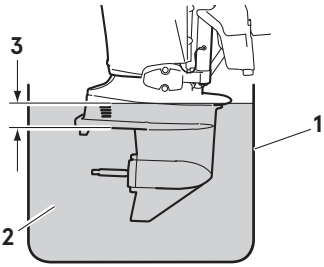

ENOF00863-0

1. Test tank
2. Water
3. Over 10 cm (4 in.)

ENOW00036-0

⚠ CAUTION

Be sure to stop engine immediately if cooling water check port is not discharging water, and check if cooling water intake is blocked. Operating engine could lead to overheating potentially leading to engine damage. Consult an authorized dealer if the cause cannot be found.

ENOW00032-A

⚠ CAUTION

Do not hold turning starter motor more than 5 seconds, or the battery may be consumed, potentially making the engine starting impossible and/or damaging the starter.
If cranking over 5 seconds fails to start engine, return main switch to "ON", and crank engine again after 10 seconds or more. Do not try to crank after engine has started.

This model is provided with start in gear protection.

ENON00010-0

Note

Start-in-gear protection prevents engine from starting at other than neutral shift. In-gear starting of engine will move the boat immediately, potentially leading to

falling down or causing passenger(s) to be thrown overboard.

Tiller handle type

1. Be sure to install the stop switch lock to the stop switch, and attach the stop switch lanyard securely to the operator or to the operator's PFD (Personal Flotation Device.)

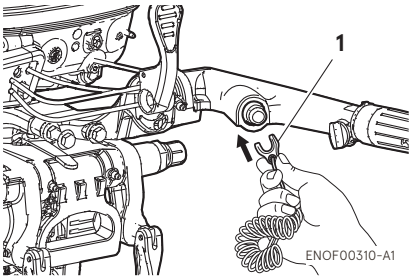

1. Stop switch lock

2. Set the control lever in the Neutral position.

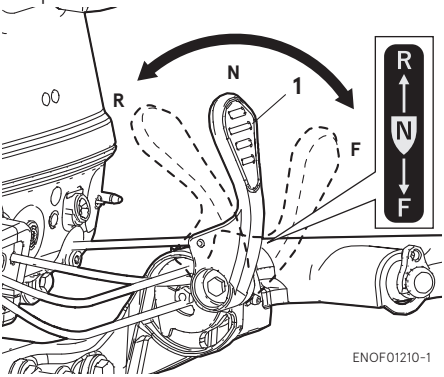

1. Shift lever

3. Set the throttle grip to START position.

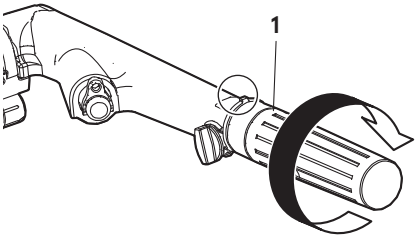

1. Throttle grip

(For manual starter type)

This engine is equipped with a compression release mechanism.

4. Pull the starter handle slowly until you feel engagement, keep pulling till you feel less resistance. Then pull it quickly. repeat if necessary until started.

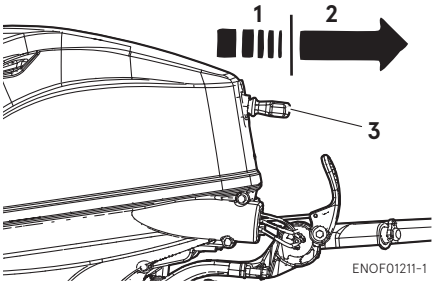

1. Slowly
2. Quickly
3. Starter handle

(For electrical starter type)

4. Push the starter switch button and release the button when the engine has started.

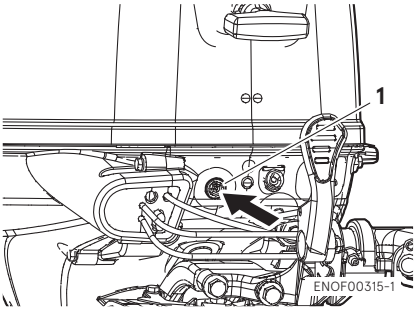

1. Starter button

5. Check the cooling water from cooling water check port.

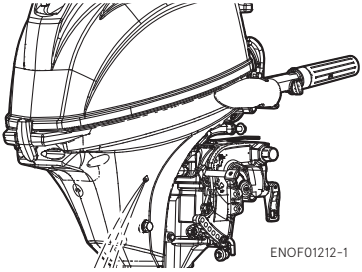

Side mount RC type

1. Be sure to install the stop switch lock to the stop switch, and attach the stop switch lanyard securely to the operator or to the operator's PFD (Personal Flotation Device.)

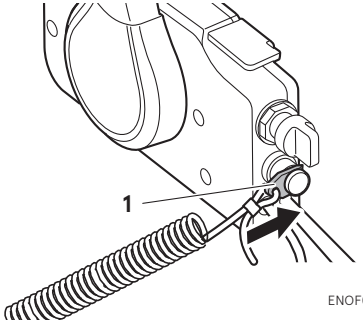

1. Stop switch lock

2. Insert the main switch key.
3. Set the control lever in the Neutral position.

ENON00504-1

Note

The free accel lever can not be raised when the control lever is in Forward or Reverse.

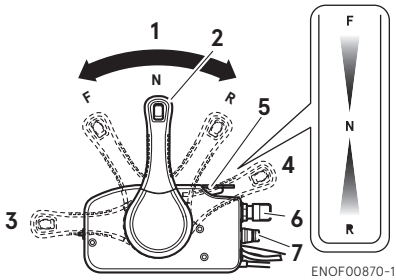

1. Neutral (N)
2. Control lever
3. Fully opened (Forward)
4. Fully opened (Reverse)
5. Free throttle lever
6. Main switch key
7. Stop switch

4. Turns the main switch key to START position.

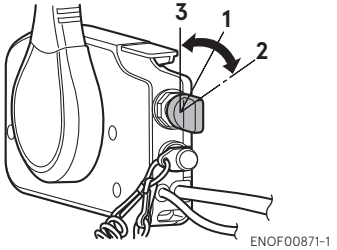

1. ON
2. START
3. OFF

5. Stop pushing the key when the engine has started.

   The key returns to the original position, automatically.
6. Returns the Free accel lever to close position.
7. Confirm warning lamp light up and then go off after engine has started.

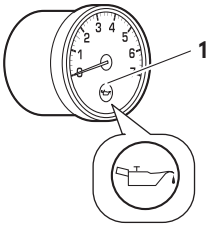

ENOF00851-A

1. Warning lamp

8. Check the cooling water from cooling water check port.

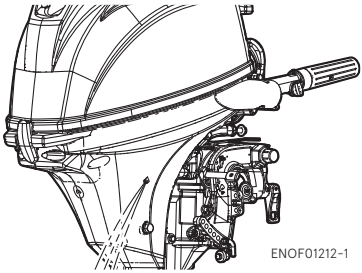

ENOF01212-1

ENOM00042-B

Emergency starting

ENOW00099-A

⚠ WARNING

When the emergency starter rope is used for starting engine;

- **Start in gear protection does not work. Be sure to shift is at neutral position. Otherwise the engine will move the boat immediately and cause personal injury.**
- **Be careful that your clothes or other items do not get caught in the rotating engine parts.**
- **To prevent accident and injury by rotating parts, do not re-attach flywheel cover and the top cowl after the engine has been started.**
- **Do not pull starter rope if any bystander is behind. The action can injure the bystander.**
- **Attach engine stop switch lanyard to clothing or any part of body like arm before starting engine.**

1. Remove the top cowl.

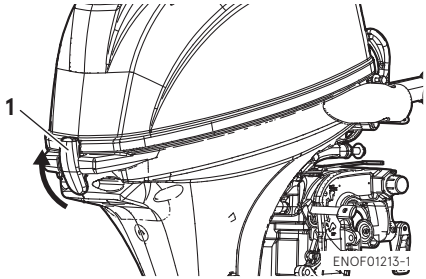

ENOF01213-1

1. Cowl latch

2. Remove the bolts (3pcs) and remove the intake silencer.

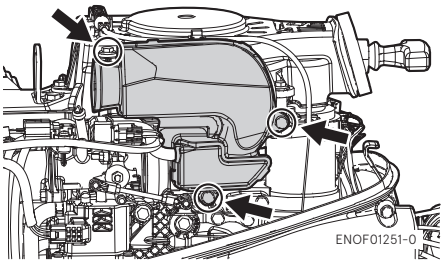

ENOF01251-0

3. Remove starter lock cable from recoil starter by pulling the starter lock cable.

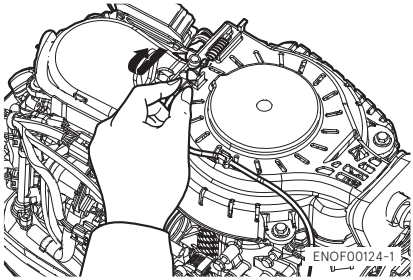

4. Remove the bolts (3pcs) and remove the recoil starter.

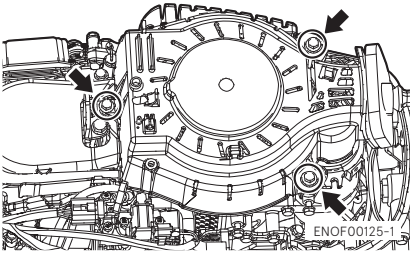

5. Insert the knotted end of the starter rope into the notch in the flywheel and wind the rope around the flywheel several turns clockwise.

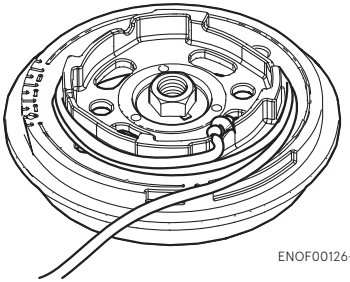

6. Tie a loop in the another end of the emergency starter rope and attach socket wrench that is included in the tool kit.

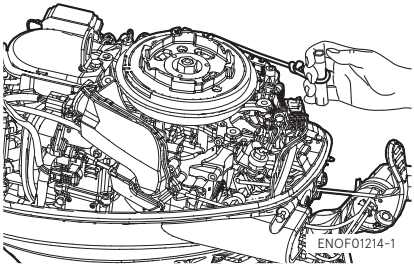

ENOW00860-0

⚠ CAUTION

Be sure to keep the harness away from the rotation parts.

7. Be sure to install the stop switch lock to the stop switch, and attach the stop switch lanyard securely to the operator or to the operator's PFD (Personal Flotation Device.)
8. Set the control lever in the Neutral position.
9. Pull the starter handle slowly until you feel engagement, keep pulling till you feel less resistance. Then pull it quickly.
10. After engine starts, do not reinstall flywheel cover and top cowl.

ENOM00043-B

3. Warming up the engine

ENOW00932-0

⚠ CAUTION

Be sure to check that cooling water is coming out of the cooling water check port during warm up.

Warm the engine at low engine speeds for about
3 minutes : above 5°C (41°F)
5 minutes at 2000 min^{-1} (rpm) : below 5°C (41°F)
This allows the lubricating oil to circulate to all parts of the engine. Operating the engine without warm up shortens the engine's life.

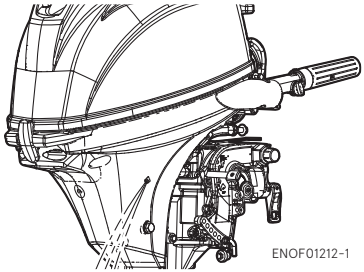

ENOM00044-0

Engine speeds

Idling speed after warming up.
Remark: In case of cold engine starting, idling speed is increased about 400 min^{-1} (rpm) for several minutes.

Clutch in (In gear)	Clutch off (Out of gear)
950 min^{-1} (rpm)	950 min^{-1} (rpm)

ENOM00972-0

Free throttle lever (Side mount RC type)

ENOW00956-0

⚠ CAUTION

- **Keep the free throttle lever fully closed-position when start the engine.**
- **The free throttle lever is inoperative unless the control lever is in neutral.**
- **Also, the control lever is inoperative unless the free throttle lever is returned to the fully-closed position.**

The free throttle lever is for warm-up operation.(Not required for engine starting) With the control lever in neutral, move the free throttle lever upward to open the throttle.

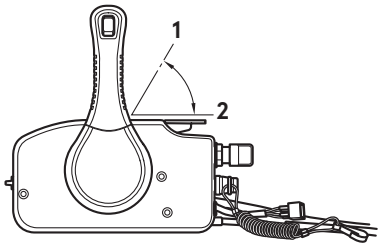

ENOF00934-0

1. Fully-open
2. Fully-closed

ENOM00046-A

4. Forward, reverse, and acceleration

ENOW00037-0

⚠ WARNING

Before shifting into forward or reverse, make sure that boat is properly moored and outboard motor can be steered fully to the right and left. Make sure that no swimmer(s) is ahead or astern of the boat.

ENOW00038-A

⚠ WARNING

- **Attach other end of emergency stop switch lanyard to the operator's PFD (Personal Flotation device) or arm and keep it attached during cruising.**
- **Do not attach the tether to a part of clothing that can be torn easily when pulled.**
- **Arrange the tether so that will not be caught by any object when pulled.**
- **Be careful not to pull the tether accidentally during cruising. Unintentional stop of engine can cause loss of control of outboard motor. Rapid loss of engine power can lead to falling down or causing passenger(s) to be thrown overboard.**

ENOW00042-0

⚠ WARNING

- **Do not shift into Reverse during planing, or control will be lost leading to serious personal injury, boat may swamp, and/or hull may be damaged.**
- **Do not shift into Reverse during cruising, or control may be lost, falling down or causing passenger(s) to be thrown overboard. Leading to serious personal injury, and steering system and/or shifting mechanism may be damaged.**

ENOW00861-0

⚠ WARNING

Do not shift at high boat speed, or control may be lost, falling down or causing passenger(s) to be thrown overboard. Leading to serious personal injury.

ENOW00862-0

⚠ CAUTION

Gear and clutch damage may occur if shifting at high engine speed.
Engine must be in the slow idle position before shifting is attempted.

ENOW00863-0

⚠ CAUTION

Idle speed may be higher during warming up of engine. If shifted to Forward or Reverse during warming up, it may be difficult to shift back to neutral. In such case, stop engine, shift to neutral, and restart engine to warm up.

ENON00014-0

Note

Frequent shifting to forward or reverse can accelerate wear or degradation of parts. In such case, replace gear oil earlier than the period specified.

ENOW00864-0

⚠ CAUTION

Do not increase engine speed unnecessarily when the shift is in neutral and reverse, or engine damage may occur.

ENOM00890-A

Tiller handle type

ENOW00865-A

⚠ CAUTION

Do not force to shift when the throttle grip is not in the fully closed position, otherwise, steering system and/or shifting mechanism may be damaged.

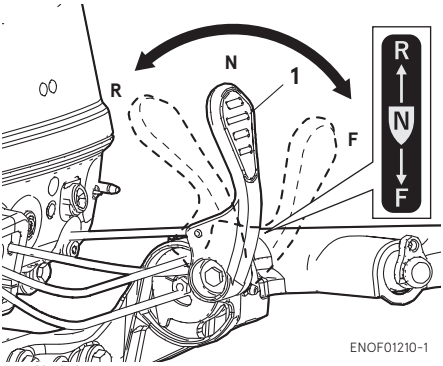

1. Shift lever

Forward

1. Turn the throttle grip to reduce engine speed.
2. When the engine reaches trolling (or idling) speed, quickly pull the shift lever to the Forward position.

Reverse

1. Turn the throttle grip to reduce engine speed.
2. When the engine reaches trolling (or idling) speed, quickly pull the shift lever to the Reverse position.

Acceleration

ENOW00867-0

⚠ WARNING

Sudden acceleration and deceleration may cause passenger(s) to be thrown overboard or falling down.

Open throttle grip gradually.

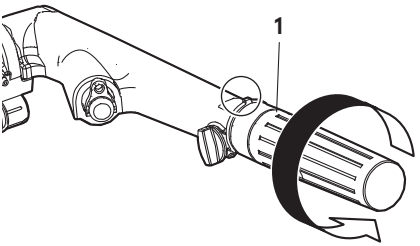

1. Throttle grip

ENOM0900-0

Side mount RC type

ENOW00867-0

⚠ WARNING

Sudden acceleration and deceleration may cause passenger(s) to be thrown overboard or falling down.

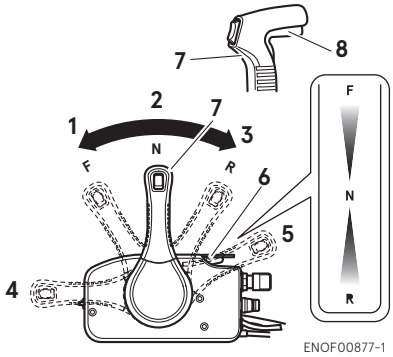

1. Forward (F)
2. Neutral (N)
3. Reverse (R)
4. Fully opened (Forward)
5. Fully opened (Reverse)
6. Free throttle lever
7. Control lever
8. Neutral lock arm

Forward

1. Quickly push the control lever to the Forward (F) position 32°, where the gear is connected, while lifting up on the lock button located under the control lever grip.
2. Further forward motion will open the throttle.

Reverse

1. Quickly pull the control lever to the Reverse (R) position at 32°, where the gear is connected, while lifting up on the lock button located under the control lever grip.
2. Further rearward motion will open the throttle.

Acceleration

ENOW00867-A

⚠ CAUTION

Sudden acceleration and deceleration may cause passenger(s) to be thrown overboard or falling down.

Open control lever gradually.

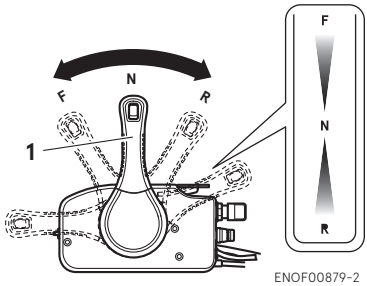

ENOF00879-2

1. Control lever

ENOM00049-A

5. Stopping the engine

ENOW00868-0

⚠ WARNING

Be careful not to remove engine stop switch lanyard from engine accidentally while boat is running. Sudden stop of engine can cause loss of steering control. It can also cause loss of boat speed, possibly leading the crew(s) and or objects on the boat to be thrown forward due to inertial force.

Tiller handle type

1. Turn the throttle grip to the slow position.

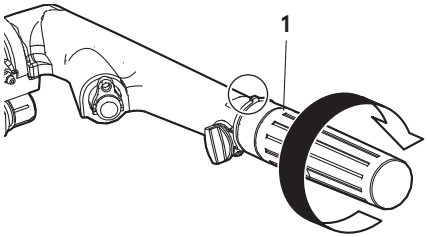

ENOF01107-1

1. Throttle grip

2. Put the shift lever in the Neutral position.
   Run the engine for 2-3 minutes at idling speed for cooling down if it has been running at full speed.
3. Turn the main switch key to the OFF position or push the stop switch. (Do not forget to turn the key off).

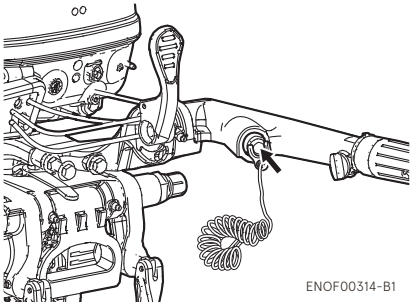

ENOF00314-B1

Side mount RC type

1. Put the control lever in the Neutral position and run the engine for 2-3 minutes at idling speed for cooling down if it has been running at full speed.

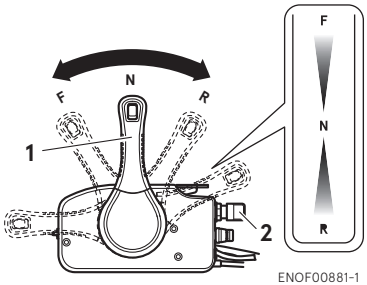

ENOF00881-1

1. Control lever
2. Main switch key

2. Turn the main switch key to the OFF position.

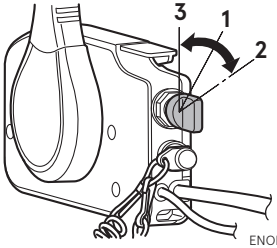

ENOF00871-1

1. ON
2. START
3. OFF

ENOW00869-0

⚠ WARNING

After stopping the engine:

- **Close the air vent screw on the tank cap.**
- **Disconnect the fuel connector of the engine and the fuel tank.**
- **Disconnect the battery cord, after each use.**

Emergency engine stopping

Remove stop switch lock to stop the engine.

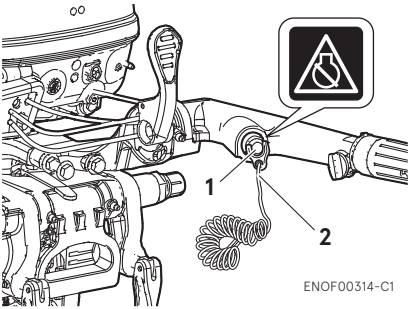

ENOF00314-C1

1. Stop switch
2. Stop switch lock

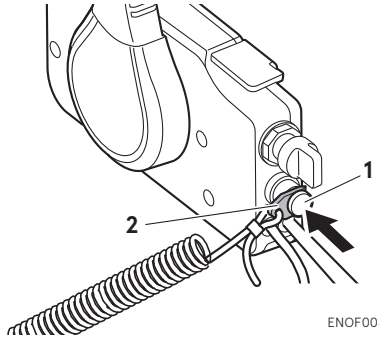

ENOF00869-A

1. Stop switch
2. Stop switch lock

ENOM00910-0

Spare emergency stop switch lock

A spare emergency stop switch lock is provided in the tool bag.

When used as described, the emergency stop switch clip and emergency stop switch lanyard system stops the engine if the operator falls away from the controls.

When an operator falls into water, be sure to use emergency stop switch lock of the spare.

Be sure to confirm the spare stop switch lock is in the tool bag before begin to operate.

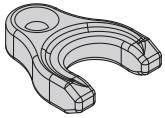

ENOF00891-0

ENOM00920-0

6. Steering

ENOW00870-0

⚠ WARNING

Sudden steering may cause passenger(s) to be thrown overboard or falling down.

Tiller handle type

Right turn

Move the tiller handle to the left

Left turn

Move the tiller handle to the right.

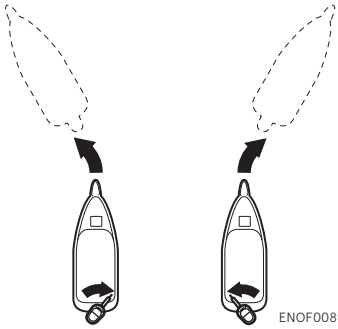

ENOF00892-0

Remote control type

Right turn

Turn the steering wheel to the right.

Left turn

Turn the steering wheel to the left.

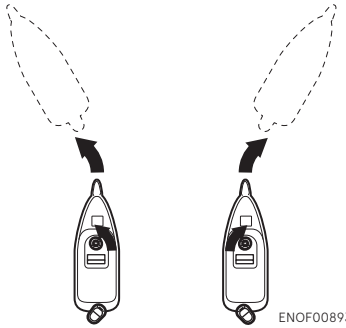

ENOF00893-0

ENOM00050-0

7. Trim angle

ENOW00043-A

⚠ WARNING

- **Adjust the trim angle when the engine is stopped.**
- **Do not put hand or finger in between outboard motor body and clamp bracket when adjusting trim angle to prevent injury in case the outboard motor body falls.**
- **Unsuitable trim position can cause loss of control of boat. When testing a trim position, run boat slow initially to see if it can be controlled safely.**

ENOW00044-0

⚠ WARNING

Excessive trim up or down may lead to unstable boat operation, potentially causing the steering difficulty that leads to accident during cruising.

- **Do not cruise at high speed if improper trim position is suspected. Stop the boat and readjust trim angle before continuing cruise.**
- **For outboard motor model with PTT switch on the bottom cowl, do not operate the switch during cruising, or control of boat may be lost.**

The trim angle of the outboard motor can be adjusted to suit the transom angle of the hull, and load conditions. Choose an appropriate trim angle that will allow the anti-ventilation plate to run parallel to the water surface during operation.

ENOM00052-0

Proper trim angle

The position of the thrust rod is correct if the hull is horizontal during operation.

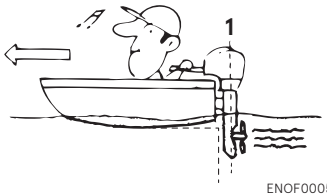

ENOF00051-1

1. Perpendicular to the water surface

ENOM00053-0

Improper trim angle (bow rises too high)

Set the thrust rod lower if the bow of the boat rises above horizontal.

ENOF00052-0

ENOM00054-0

Improper trim angle (bow dips into the water)

Set the thrust rod higher if the bow of the boat is below horizontal.

ENOF00053-0

■ Manual Tilt type

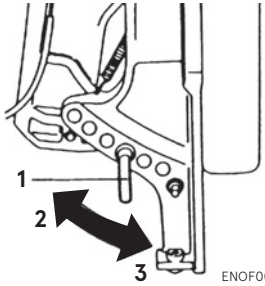

ENOF00674-A

1. Thrust rod
2. Higher
3. Lower

■ Power Tilt type

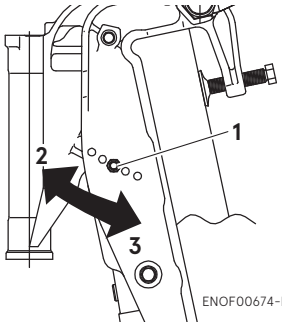

ENOF00674-B

1. Trim lock pin
2. Higher
3. Lower

Trim angle adjustment (Manual tilt type)

The transom angle adjustment

1. Stop the engine.

2. Shift into neutral.
3. Raise the outboard motor to the tilt up position.
4. Change the thrust rod position as following picture.

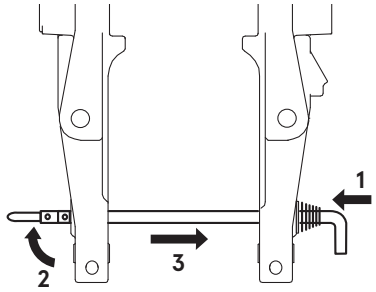

ENOF01238-1

1. Push in
2. Rise the stopper
3. Pull out

5. Reinstall the thrust rod securely.
6. Gentry lower the outboard.

Trim angle adjustment (Power tilt type)

The transom angle adjustment

1. Stop the engine
2. Operate the Power Tilt switch and raise the outboard motor to the tilt up position.
3. Lock the tilt with the Tilt stopper.
4. Change the trim lock pin position as following picture.

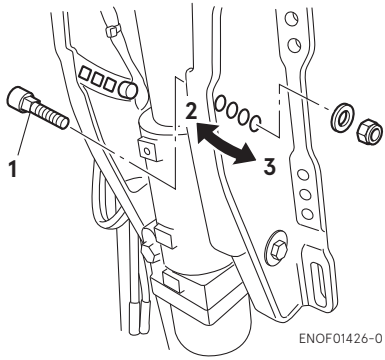

ENOF01426-0

1. Trim lock pin
2. Higher
3. Lower

5. Reinstall the trim lock pin securely.
6. Operate the Power Tilt switch and lower the outboard.

ENOM00060-B

8. Tilt up and down

ENOW00055-0

⚠ WARNING

Do not tilt up or down outboard motor when swimmer(s) or passenger is near to prevent them from being caught between outboard motor body and clamp bracket in case the outboard motor body falls.

ENOW00048-0

⚠ WARNING

When tilting up or down, be careful not to place your hand between the swivel bracket and the stern bracket.
Be sure to tilt the outboard motor down slowly.

ENOW00056-A

⚠ WARNING

When tilting up outboard motor with fuel joint for over a few minutes, be sure to disconnect fuel hose, or fuel may leak, potentially catching fire.

ENOW00057-0

⚠ CAUTION

Do not tilt up outboard motor while engine operates, or no cooling water may be fed, leading to engine seizure due to overheating.

ENON00921-0

Note

Before tilting the outboard motor up, after stopping the motor leave it in the running position for about a minute to allow water to drain from inside the engine.

ENOM00062-0

Manual Tilt type

Tilt up

Push the reverse lock lever down until it stops. (This is the tilt up position.) Now, tilt the outboard motor all the way up until it is locked in place.

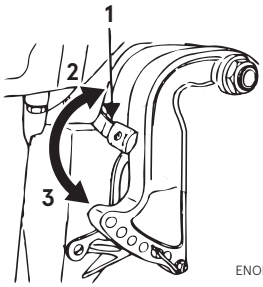

ENOF00059-0

1. Reverse lock lever
2. Tilt down position
3. Tilt up position

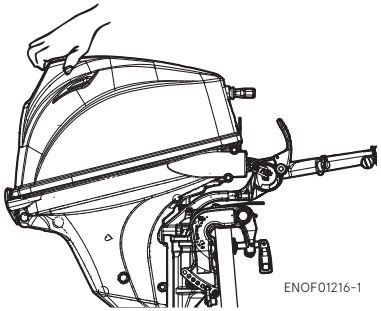

ENOF01216-1

ENOM00063-1

Tilt down

Pull the reverse lock lever upward until it stops. (This is the tilt down position.) Lift up the outboard motor slightly, and then lower it.

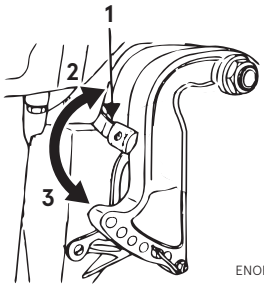

ENOF00059-0

1. Reverse lock lever
2. Tilt down position
3. Tilt up position

ENOM00069-A

Power Tilt type

Tilt up

1. Operate the Power Tilt switch and tilt the outboard motor up.
2. Lock the tilt with the Tilt stopper after the outboard motor has been tilted up

Tilt down

1. Release the tilt stopper from the set-up position while slightly tilting up outboard motor.

2. Operate the Power Tilt switch and tilt the outboard motor down until the motor touches to the thrust rod.

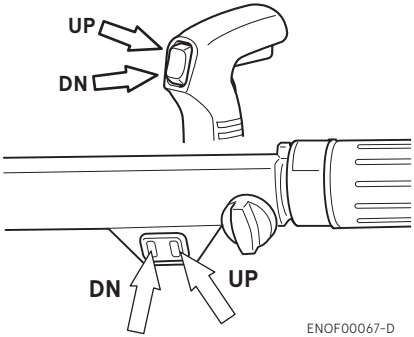

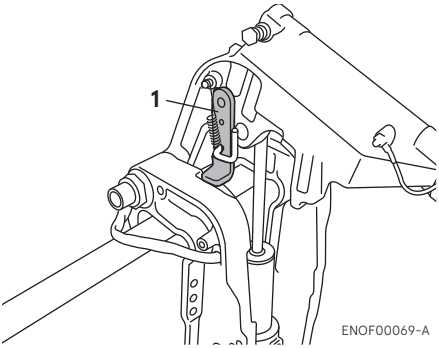

1. Tilt stopper

The outboard motor can also be tilted up and down using the switch provided under the bottom cowl.

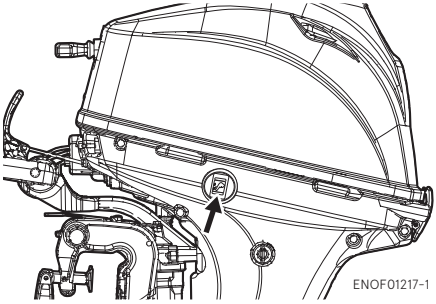

It is possible to tilt up or down in spite of main switch "ON" or "OFF".

ENOM00940-0

Manual relief valve

If the battery is dead, and the power tilt switch thus inoperative, open the manual valve completely in the Manual direction. This will allow manual tilting of the outboard motor.

ENOW00872-0

⚠ WARNING

Make sure the manual relief valve is closed before operating the outboard motor. If the manual relief valve is not closed, the outboard motor will tilt up when operated in reverse.

ENOW00873-0

⚠ WARNING

Before opening the manual relief valve, make sure nobody is under the outboard motor. If the outboard motor is in the tilted up position, it will tilt down suddenly if the manual relief valve is loosened in the "Manual" direction.

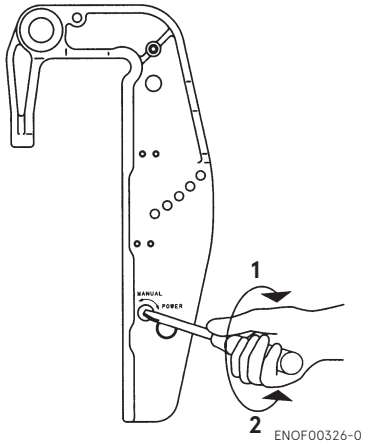

1. Power
2. Manual

ENOM00068-A

9. Shallow water operation

ENOW00051-0

⚠ WARNING

During shallow water operation, be careful not to place your hand between the swivel bracket and the clamp bracket. Be sure to tilt the outboard motor down slowly.

ENOW00053-0

⚠ CAUTION

While in shallow water drive position, do not operate the outboard motor in Reverse. Operate the outboard motor at slow speed and keep the cooling water intake submerged.

ENOW00054-0

⚠ CAUTION

Do not overtilt outboard motor when driving shallow water, or air may be sucked through water inlet, potentially leading to engine overheating.

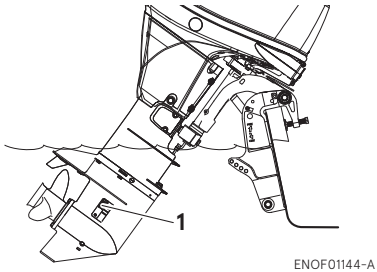

1. Water inlet

Manual tilt type

1. Shallow water running position:
   Put the reverse lock lever in the tilt up position, and tilt up the outboard motor to put the outboard motor in the shallow water running position.

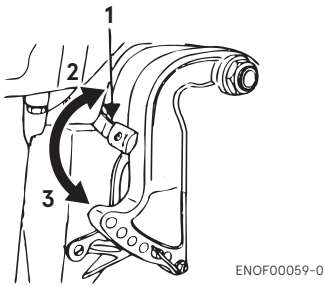

1. Reverse lock lever
2. Tilt down position
3. Tilt up position

2. Return to normal running position:
   Put the reverse lock lever in the tilt down position, slightly lift up the outboard motor, and then put it down.

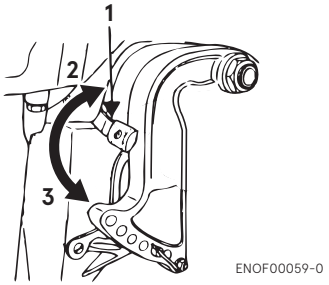

1. Reverse lock lever
2. Tilt down position
3. Tilt up position

ENOM00069-A

Power Tilt type

1. Operate the Power Tilt switch and tilt the outboard motor up into desired shallow water running position.

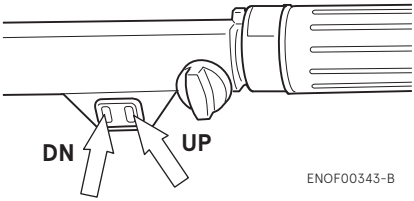

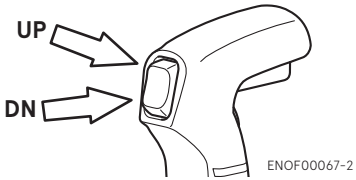

REMOVING AND CARRYING THE OUTBOARD MOTOR

ENOM00070-A

1. Removing the outboard motor

ENOW00890-0

⚠ WARNING

Before installing the outboard motor on the boat, hang the outboard motor with the hoist or equivalent device by attaching the engine hanger to the outboard.
Use the hoist with allowable load is 150 kg (330 lbs) or above.

ENOW00064-0

⚠ CAUTION

Engine may be hot immediately after operating and could cause burns if touched. Allow engine to cool down before attempting to carry the outboard.

1. Stop the engine.
2. Remove the top cowl.
3. Disconnect the fuel connector, the remote control cables and the battery cords from the outboard motor.
4. Attach the hoist hooks to the engine hanger.
5. Remove the outboard motor from boat and completely drain the water from the gear case.

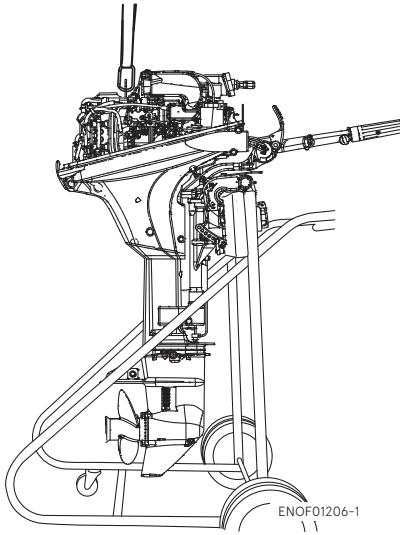

ENOM00071-A

2. Carrying the outboard motor

ENOW00933-0

⚠ WARNING

Be sure to disconnect fuel connector except when operating engine.
Fuel leakage is a fire or explosion hazard, which can cause serious injury or death.

ENOW00065-0

⚠ WARNING

Close air vent screw of fuel tank before carrying or storing outboard motor and fuel tank, or fuel may leak, potentially catching fire.

ENOW00066-0

⚠ CAUTION

- **Do not give a shock to an outboard motor during transportation. It becames a cause of breakage.**

- **Do not carry or store outboard motor in any of positions described below. Otherwise, engine damage or property damage could result from leaking oil.**

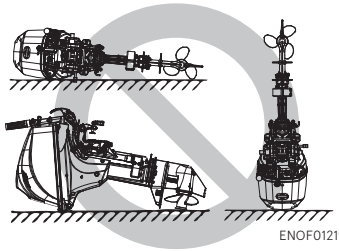

ENOF01219-1

Keep the outboard motor in a vertical position when carrying.
The optional outboard motor stand is recommended for keeping the outboard motor vertical both during transport and storage.

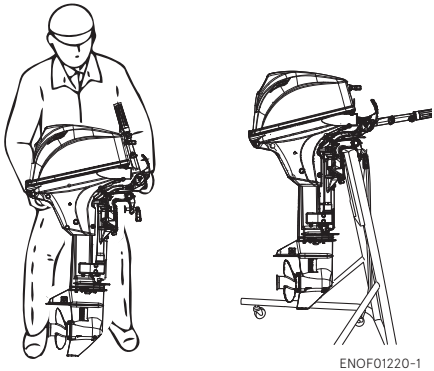

ENOF01220-1

ENON00021-1

Note

- If the outboard motor must be laid down be sure drain the fuel, then the port side faces down as shown in the following drawing.
- Elevate power unit 2 inches to 4 inches if traveling to avoid oil spillage.

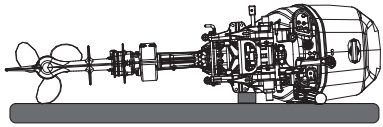

ENOF01221-1

ENOM00072-A

3. Trailering

ENOW00072-0

⚠ CAUTION

Trailering in the tilted position may cause damage to the outboard motor, boat, etc.

ENOW00073-A

⚠ WARNING

Be sure to disconnect fuel connector except when operating engine.
Fuel leakage is a fire or explosion hazard, which can cause serious injury or death.

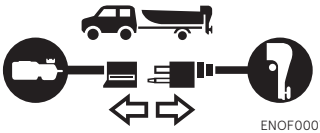

ENOF00075-1

ENOW00068-0

⚠ WARNING

Close air vent screw of fuel tank and fuel cock before carrying or storing outboard motor and fuel tank, or fuel may leak, potentially catching fire.

ENOW00071-0

⚠ CAUTION

The tilt support device supplied on your outboard motor is not intended for towing. It is intended to support the outboard motor while the boat is docked, beached, etc.

When transporting a boat on a trailer with the outboard motor still attached, disconnect the fuel line from the outboard motor beforehand and keep the outboard motor in the normal running position or on a transom saver bar.

Tiller handle type

To prevent the outboard motor from moving when it is attached on a boat during transport on a trailer, properly tighten the steering friction lever (page 53).

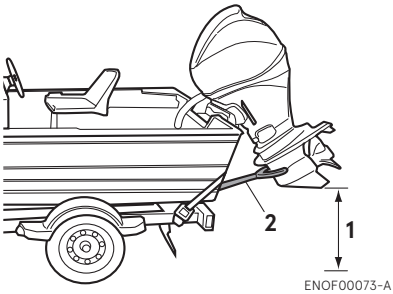

1. Ground clearance should be provided sufficiently.
2. Transom saver bar

ENOW00067-0

⚠ WARNING

Do not go under outboard motor tilted up even if it is supported by support bar, or accidental fall of outboard motor could lead to severe personal injury.

ADJUSTMENT

ENOM00073-0

1. Steering friction

Tiller handle type

ENOW00074-A

⚠ WARNING

Do not overtighten the steering friction lever it could result in difficulty of movement resulting in the loss of control causing an accident and could lead to severe injury.

Adjust this lever to achieve the desired steering friction (drag) on the tiller handle. Move lever towards (2) to decrease friction and move lever towards (3) to increase friction.

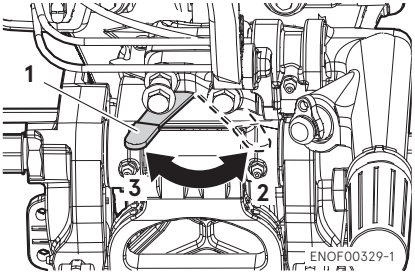

1. Steering friction lever
2. Decrease
3. Increase

ENOM00074-A

2. Throttle grip friction

ENOW00074-B

⚠ WARNING

Do not overtighten the throttle adjustment screw or it could result in difficulty of movement resulting in the loss of control causing an accident and could lead to severe injury.

Friction adjustment of the throttle grip can be made with the throttle adjustment screw.

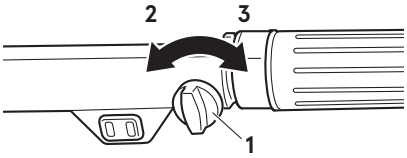

1. Steering friction lever
2. Decrease
3. Increase

ENOM00075-0

3. Remote control lever friction

ENOW00074-C

⚠ WARNING

Do not overtighten the remote control throttle friction adjustment screw or it could result in difficulty of movement resulting in the loss of control causing an accident and could lead to severe injury.

To adjust the friction of the remote control lever, turn the throttle friction adjustment screw on the front of the remote control. Turn clockwise to increase the friction and counter-clockwise to decrease it.

Side mount type

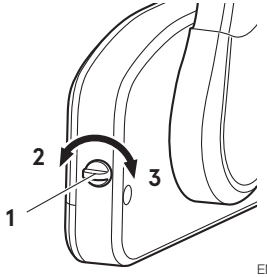

1. Throttle friction adjustment screw
2. Decrease
3. Increase

ENOM00077-0

Care of your outboard motor

To keep your outboard motor in the best operating condition, it is very important that you perform daily and periodic maintenance as suggested in the maintenance schedules that follow.

ENOW00077-0

⚠ CAUTION

- **Your personal safety and that of your passengers depends on how well you maintain your outboard motor. Carefully observe all of the inspection and maintenance procedures described in this section.**
- **The maintenance intervals shown in the checklist apply to an outboard motor in normal use. If you use your outboard motor under severe conditions such as frequent full-throttle operation, frequent operation in brackish water, or for commercial use, maintenance should be performed at shorter intervals. If in doubt, consult your dealer for advice.**
- **We strongly recommend that you use only genuine replacement parts on your outboard motor. Damage to your outboard motor arising from the use of other than genuine parts is not covered under the warranty.**

ENOM00322-1

1. Daily Inspection

Perform the following checks before and after use.

ENOW00078-1

⚠ WARNING

Do not use outboard motor if any abnormality is found during pre-operation check otherwise it could result in severe damage to the motor or severe personal injury.

Item	Points to Check	Remedy
Fuel System	· Check the amount of fuel in the tank.	Replenish
	· Check for debris or water in the fuel filters.	Clean or replace if necessary
	· Check the rubber hoses for fuel leakage.	Replace if necessary
Fuel Tank Cap	· Check for crack, leakage, damage in the fuel tank cap.	Replace if necessary
	· Check for crack, damage in the gasket.	Replace if necessary
	· Check for leakage at full close.	Replace if necessary
	· Check for ratchet performance.	Replace if necessary
Engine Oil	· Check the oil level.	Fill oil
Electrical Equipment	· Check that the main switch functions normally.	Replace if necessary
	· Check that the battery electrolyte level and specific gravity are normal.	Replenish or recharge
	· Check for loose connections on the battery terminal.	Retighten
	· Check that the stop switch functions normally and make sure the stop switch lock is there.	Remedy or replace if necessary
	· Check cords for loose connections and damage.	Correct or replace if necessary
	· Check the spark plugs for dirt, wear and carbon build-up.	Clean or replace if necessary
	· Check the warning LED lamp (ON for 5 to 7 secs.) when start up.	Repair
Recoil starter	· Check the rope for wear and chafing.	Replace if necessary
	· Check the ratchet engagement.	Replace if necessary
Clutch and Propeller System	· Check that clutch engages correctly when operating the shift lever.	Adjust
	· Visually Check propeller for bent or damaged blades.	Replace if necessary
	· Check the propeller nut is tightened and the split pin is present.	Tighten or replace
Installation of Motor	· Check all the bolts attaching the motor to the boat.	Tighten
	· Check the thrust rod installation.	Replace if necessary
Power Tilt	· Check working of the tilt up and down of the motor.	Repair
Cooling Water	· Check that cooling water is discharged from the cooling water check port after the engine has started.	Repair
Tools and Spares	· Check that there are tools and spare parts for replacing spark plugs, the propeller, etc.	Order
	· Check that you have the spare rope and stop switch lock.	Order

Item	Points to Check	Remedy
Steering Devices	· Check the operation of the steering handle.	Repair
Other parts	· Check if the anode is securely installed. · Check the anode for corrosion and deformation.	Repair if necessary Replace

ENOM00081-A

Oil level checking

If the oil level is low, or too high, the life of the engine will be shortened significantly.

1. Stop the engine and set it in a vertical position.
2. Remove the top cowl.
3. Remove the dipstick after 5 minutes engine has stopped.
4. Wipe oil off the oil dipstick with a clean rag.
5. Put in the dipstick.
6. Take out the dipstick and check the oil level.
7. Return the dipstick.

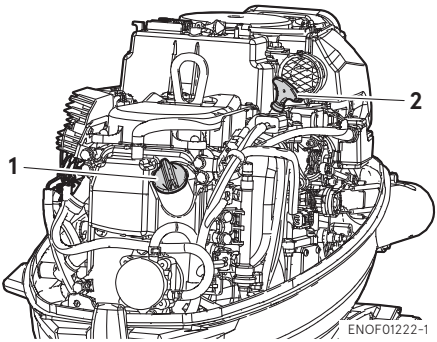

1. Filler cap
2. Dipstick

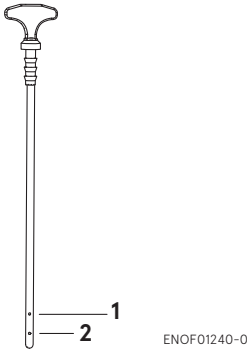

1. Upper level
2. Lower level

ENON00024-0

Note

The oil level should be checked when the engine is cold.

ENON00025-0

Note

Consult with an authorized dealer if the engine oil is milky color, or appears contaminated.

ENOM00082-A

Engine oil replenishing

ENOW00079-A

⚠ CAUTION

- **Do not add engine oil of brand and grade other than existing one. In case engine oil of other brand or grade is added, drain all oil and ask dealer for treatment.**
- **In case other than engine oil such as gasoline is put in the oil chamber, empty the chamber and ask dealer for treatment.**

- **When replenishing engine oil, be careful not to allow entry of foreign matters such as dust and water into oil chamber.**
- **Wipe off engine oil well immediately if spilled and dispose of it in accordance with local fire prevention and environment protection regulations.**
- **Do not replenish engine oil over upper limit. If overfilled, remove oil to upper limit. If engine oil is over the upper limit, it can leak potentially leading to engine damage.**

If the oil level is low, or at lowest mark, add recommended oil to the middle dipstick mark.

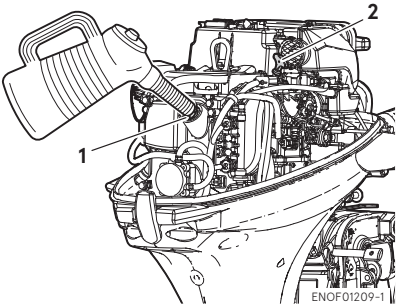

1. Filler port
2. Dipstick

ENOM00083-B

Washing outboard motor

ENOW00081-0

⚠ WARNING

Do not start engine without removing propeller, or accidentally turning propeller could cause personal injury.

ENOW00082-0

⚠ WARNING

Never start or operate the engine indoors or in any space which is not well ventilated. Exhaust gas contains carbon monoxide, a colorless and odorless gas which can be fatal if inhaled for any length of time.

ENOW00920-0

⚠ CAUTION

When washing the outboard motor, be careful not to spray the water inside of the top cowl, especially electrical components.

ENON00026-0

Note

It is recommended to check chemical properties of water on which your outboard motor is regularly used.

If outboard motor is used in salt water, brackish water or water with a high acidic level, use fresh water to remove salt, chemicals or mud. And flush cooling water passage after every cruising or before storing outboard motor for long time. Before flushing, remove the propeller and the forward thrust holder.

ENOM00085-E

Flushing hose joint

ENOW00922-0

⚠ CAUTION

To prevent the engine from starting when you are near the propeller, remove the stop switch lock.

1. Tilt down the outboard motor.
2. Remove the flushing connector cap from the outboard motor, and screw in the hose joint.
3. Connect a water hose. Turn on the water and adjust the flow.

   Continue flushing the outboard motor for 3 to 5 minutes

4. After the flushing, be sure to reattach the flushing connector cap.
5. Tilt up the outboard motor.

.

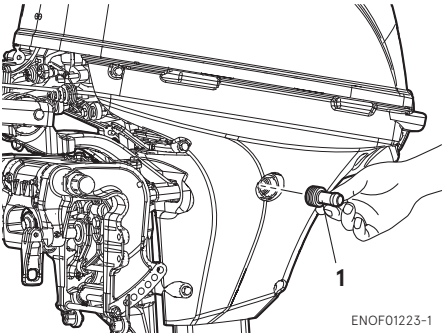

1. Hose joint

ENOM00085-A

Flushing by test tank

ENOW00081-0

⚠ WARNING

Do not start engine without removing propeller, or accidentally turning propeller could cause personal injury.

ENOW00082-0

⚠ WARNING

Never start or operate the engine indoors or in any space which is not well ventilated. Exhaust gas contains carbon monoxide, a colorless and odorless gas which can be fatal if inhaled for any length of time.

ENOW00036-A

⚠ CAUTION

When the engine is started in the test tank, to avoid over heating and water pump damage, be sure the water level is at least 10 cm (4 in.) above the anti ventilation plate.
And be sure to remove the propeller, when starting the engine in the test tank. (See page 66)

Run the engine only at idling.

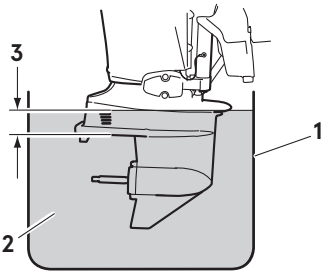

1. Test tank
2. Water
3. Over 10 cm (4 in.)

ENOM00950-0

Fuse replacement

ENOW00923-0

⚠ CAUTION

Before replacing a fuse, disconnect the battery cable from the battery negative (-) terminal. Failure to do so may cause a short-circuit.

ENOW00924-0

⚠ CAUTION

Never use a fuse with a rating that exceeds the specified rating as this could cause serious damage to the electrical system.

If a blown fuse is detected, try to determine the cause for this and correct it. If the cause for the problem is not corrected, the fuse will likely blow again.
If the fuse continues to blow, request an authorized Tohatsu dealer to inspect the outboard motor.

1. Stop the engine and disconnect the battery cable from the battery negative (-) terminal.
2. Remove the engine cover.
3. Remove the fuse box lid.
4. Remove the fuse and check it. If the fuse is blown, replace it with a fuse of the same specified rating. The outboard motor is supplied with spare fuses in the spare fuse holder.

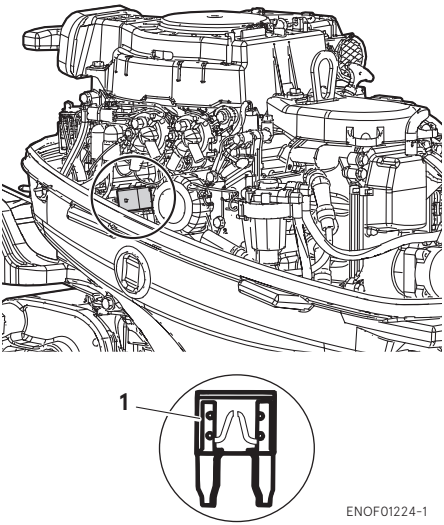

1. Blown fuse

ENOM00090-B

2. Periodic Inspection

It is important to inspect and maintain your outboard motor regularly. At each interval on the chart below, be sure to perform the indicated servicing.
Maintenance intervals should be determined according to the number of hours or number of months, whichever comes first.

Description		Inspection intervals					Inspection procedure	Remarks
		First 20 hours or 1 month	Every 50 hours or 3 months	Every 100 hours or 6 months	Every 200 hours or 1 year	Every 400 hours or 2 year		
Fuel System	Fuel filter			●/○			Check and clean/Replace if necessary	Refer to P63
	High pressure fuel hose*1	●/○	●/○				Check/Replace if necessary	
	Fuel filter (Vapor separator)*1					○	Check, clean or replace if necessary	
	Fuel tank	●/○	●/○				Check and clean	
	Fuel tank cap	●/○	●/○				Check /Replace if necessary	
	Fuel pump*1					○	Check /Replace if necessary	
	Fuel pressure*1				○		Check	
	Hose*2	●/○	●/○				Check /Replace if necessary	
Ignition System	Spark plug			●			Check and clean/Replace if necessary	Gap (0.80-0.9mm) Refer to P67
	Spark plug cap /High tension cord*1	○		○			Check /Replace if necessary	
Starting System	Starter rope*2	●/○	●/○				Check /Replace if necessary	
	Starter motor*1				○		Check	
	Battery /Cable connection*1	○	○				Check	
Engine	Engine oil	● Replace		● Replace			Replace	Approx.1.0L Oil filter replace 1.2L Refer to P61
	Oil filter (4 stroke)*1				○ Replace		Replace (Every 200 hours or 2 years)	
	Oil strainer*1				○		Check and clean	
	Valve clearance*1				○		Check and adjustment	IN : 0.13-0.17mm EX : 0.18-0.22mm
	Timing belt*1				○		Check and replace if necessary	
	Idling speed*1	●/○	●/○				Check	
	Compression pressure*1				○		Check	
	Combustion chamber*1					○	Check	
	Thermostat*1				○		Check	
Lower Unit	Propeller	●	●				Check and replace if necessary	Refer to P66
	Shear pin/Split pin	●	●				Check and replace if necessary	Refer to P66
	Gear oil	● Replace	●	● Replace			Check and replace	Approx. 465ml Refer to P65
	Water strainer	●	●				Check	
	Water pump impeller*2		●/○		○ Replace		Check/Replace if necessary	
	Water pump housing*1					○	Check and replace if necessary	

Description		Inspection intervals					Inspection procedure	Remarks
		First 20 hours or 1 month	Every 50 hours or 3 months	Every 100 hours or 6 months	Every 200 hours or 1 year	Every 400 hours or 2 year		
Shift/ Throttle	Throttle cable			○			Check and replace if necessary	
	Throttle link*1	○	○				Check and adjustment	
	Shift cable		○				Check and replace if necessary	
	Shift link*1	○	○				Check and adjustment	
Other	Power trim & Tilt	●/○		●/○			Check /Replenish	Refer to P70
	Warning system*1		○				Check	
	Stop switch	●	●				Check	
	Meters	○	○				Check	
	Bolt, nut	○	○				Retighten	
	Sliding part /rotation part	●	●				Apply grease	Refer to P71
	Grease nipple	●	●				Pump in grease	Refer to P71
	Outer equipment	●	●				Check	
	Anode (engine)			○			Check and replace if necessary	Refer to P69
	Anode (except for engine)		●/○				Check /Replace if necessary	Refer to P69
	Top cowl/Latch				●/○		Check / Adjustment	

*1"●" This procedure can be performed by end user (or dealer)

*2"○" This procedure shall be carried out by the dealer.

ENON00030-0

Note

Your outboard motor should receive careful, and complete inspection at 300 hours. This is the best time for major maintenance procedures to be carried out.

ENOM00091-A

Engine oil replacement

Engine oil mixed with dust or water will dramatically shorten the life of the engine.

ENOW00091-0

⚠ CAUTION

You may be injured due to high engine temperatures if you fill engine oil just after stopping. Changing engine oil should be done after the engine has been cooled.

ENOW00092-0

⚠ CAUTION

- **Do not overfill engine oil, or engine oil could leak and/or engine could be damaged. If engine oil level is over upper limit marks of oil gauge, drain oil to level lower than upper limit.**
- **Be sure that outboard motor is in upright and level position when checking or changing oil.**
- **Stop engine immediately if low oil pressure warning lamp is lit or oil leak is found, or engine could be severely damaged. Consult dealer.**
- **Wipe off engine oil well immediately if spilled and dispose of it in accordance with local fire prevention and environment protection regulations.**

ENOW00090-0

⚠ CAUTION

Use of engine oils that do not meet these requirements will result in reduced engine life, and other engine problems.

ENOW00933-0

⚠ CAUTION

Engine oil mixed with dust or water will dramatically shorten the life of the engine.

To change engine oil:

Be sure to use recommended engine oil (see page 13).

1. Stop the engine and allow it to cool.
2. Tilt up the outboard motor and lock the tilt with the tilt stopper.
3. Turn the steering on the outboard motor so that the drain hole is facing downward.
4. Put a oil drain pan under the oil drain screw.
5. Remove the oil drain screw and completely drain oil from the engine.

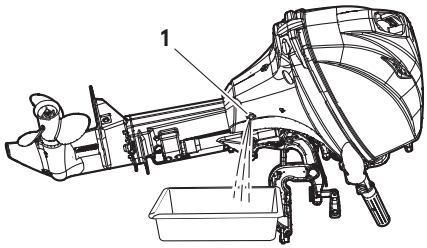

ENOF01225-1

1. Drain hole

6. Tighten the oil drain screw with applying oil on the sealing surface of screw. (Use new oil drain washer)

Oil drain screw specified torque
24N·m (17 ft·lb, 2.4 kgf·m)

ENON00028-A

Note

If a torque-wrench is not available when you are fitting a oil filter, a good estimate of the correct torque is 3/4 to 1 a turn past finger-tight. Have the oil filter adjusted to the correct torque as soon as possible with a torque-wrench.

7. Reset the engine in a vertical position.
8. Repeat 3 to 7 procedures two or three times to drain the oil completely.
9. Remove the top cowl and the oil filler cap.
10. Fill the engine through filler port with recommended oil (see chart below) to the middle of dipstick mark.
11. Tighten the oil filler cap.

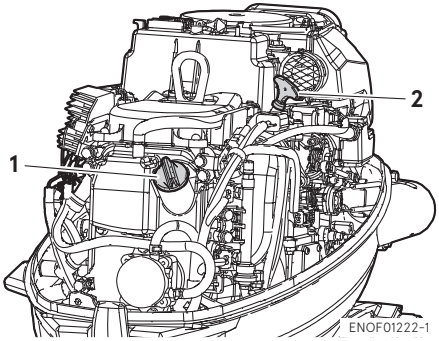

ENOF01222-1

1. Filler cap
2. Dipstick

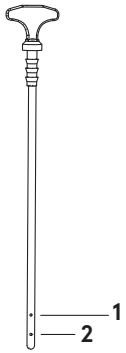

ENOF01240-0

1. Upper limit (Max.)
2. Lower limit (Min.)

ENON00920-0

Note

Use only recommended engine oil (See page 13)

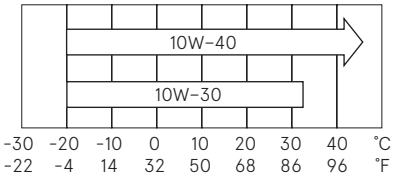

ENOF00208-0

Oil volume needed for complete oil replacement	
With oil filter replacement	Without oil filter replacement
1200 mL (40.6 fl.oz.)	1000 mL (33.8 fl.oz.)

ENOW00925-0

⚠ CAUTION

Wipe off engine oil well immediately if spilled and dispose of it in accordance with local fire prevention and environment protection regulations.

ENON00031-0

Note

- If any amount of water is found in engine oil, making it milky white, consult dealer.
- If engine oil is contaminated with fuel, emitting strong fuel smell, consult dealer.
- Some oil dilution is normal if engine is idled or trolled for long periods, especially in cooler water temperatures.

ENOM00093-A

Fuel filters and fuel tank cleaning

ENOW00093-0

⚠ WARNING

Gasoline and its vapors are very flammable and can be explosive.

- **Do not start this procedure while engine is operating or hot even after stopping it.**
- **Place fuel filter away from every source of ignition such as sparks or open flames.**
- **Wipe off gasoline well immediately if spilled and dispose of it in accordance with local fire prevention and environment protection regulations.**
- **Install fuel filter with all related parts in place, or fuel leak could occur, leading to catching fire or explosion.**
- **Check fuel system regularly for leakage.**
- **Contact authorized dealer for fuel system services. Services by unqualified person could lead to engine damage.**

Fuel filters are provided inside the fuel tank and engine.

ENOM00094-0

Fuel filter (for engine)

1. Check in the cup for water and debris.

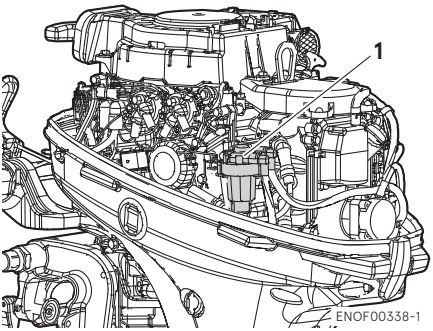

1. Fuel filter

■ **In case of water entry**

1. Prepare a container under the outlet of the fuel filter.
2. Loosen the drain screw of the fuel filter.
3. Squeeze the primer bulb several times. After the water is drained, stop squeezing.
4. Tighten the drain screw securely and confirm there is no fuel leaking.

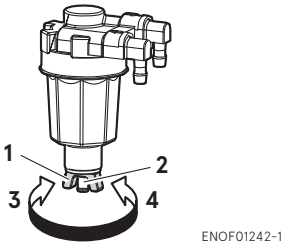

1. Drain screw
2. Drain port
3. Loosen
4. Tighten

■ **In case of debris**

1. If present, disconnect hoses from the fuel connector (male) and the fuel pump.
2. Remove the cup, filter and O-rings from the fuel filter body.
3. Check the wear and clogging for each parts, and replace if necessary.
4. Remove fuel and any water or debris from the cup, filter and hoses.
5. Reassemble all parts.

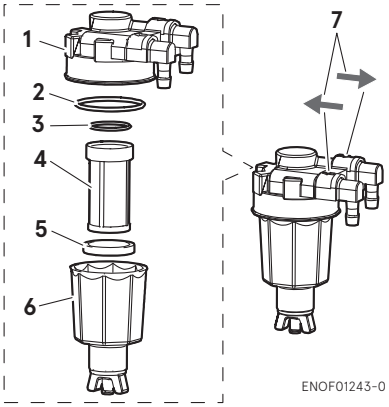

1. Body
2. O-ring
3. O-ring
4. Filter
5. Float
6. Cup
7. Indicate of Fuel Flow

ENOM00096-A

Fuel filter (for fuel tank)

Water or dirt in the fuel tank will cause engine performance problems.

Check and clean the tank at specified times or after the outboard motor has been stored for a long period of time (over three months).

1. Remove the fuel pickup elbow of the fuel tank by turning it counterclockwise
2. Clean the fuel filter and check the O-ring. Replace it if necessary.

3. Reassemble all parts.

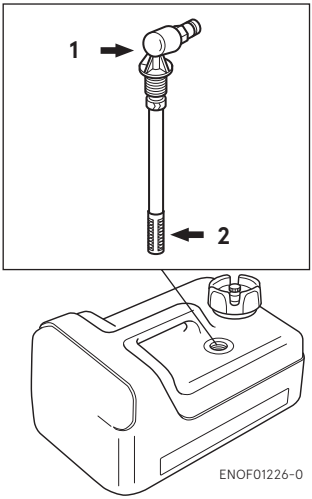

1. Fuel pick up
2. Filter

ENOM00098-A

Gear oil replacement

ENOW00094-0

⚠ WARNING

- **Be sure that outboard motor is secured to transom or service stand, or accidental drop or fall of outboard motor could lead to severe personal injury.**
- **Be sure to lock outboard motor if it is tilted up, or accidental fall of outboard motor could lead to severe personal injury.**
- **Do not go under outboard motor tilted up and locked, or accidental fall of outboard motor could lead to severe personal injury.**

1. Tilt down the outboard motor.
2. Remove the oil plugs (lower and upper), and completely drain the gear oil into a pan.

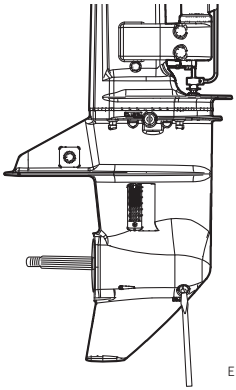

3. Insert the oil tube nozzle into the lower oil plug hole, and fill with gear oil by squeezing the oil tube until oil flows out of the upper plug hole and bubbles is disappeared to remove the air.

ENON00033-0

Note

Use genuine gear oil or the recommended one (API GL-5: SAE #80 to #90).
Required volume: approx. 465 mL (15.7 fl.oz.).

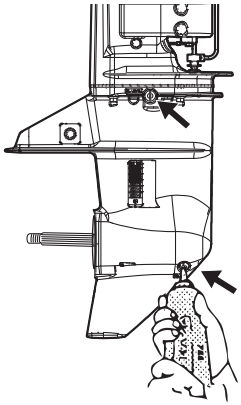

4. Install the upper oil plug, and then remove oil tube nozzle and install the lower oil plug.

ENOW00095-0

⚠ CAUTION

Do not reuse oil plug gasket. Always use new gasket and tighten oil plug properly to prevent entry of water into lower unit.

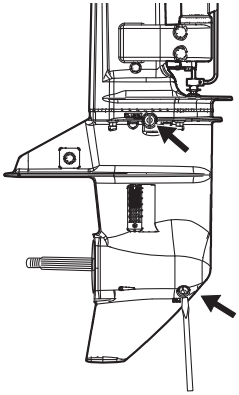

ENOF01246-0

ENOW00928-0

⚠ CAUTION

Wipe off gear oil well immediately if spilled and dispose of it in accordance with local fire prevention and environment protection regulations.

ENON00032-0

Note

If water in the oil, giving it a milky colored appearance. Contact your dealer.

ENON00033-0

Note

Use genuine gear oil or the recommended one (API GL-5: SAE #80 to #90).
Required volume: approx. 465 mL (15.7 fl.oz.).

ENOM00086-A

Propeller replacement

ENOW00084-0

⚠ WARNING

- **Do not begin propeller removal and installation procedure with spark plug caps attached, shift in forward or reverse, main switch at other than "OFF", engine stop switch lock attached to the switch, and starter key attached, or engine could accidentally start leading to serious personal injury. Disconnect battery cable if possible.**
- **The propeller edge is thin and sharp. Wear the groves during replacement to protect your hands.**

ENOW00086-0

⚠ CAUTION

- **Do not install propeller without thrust holder, or propeller boss could be damaged.**
- **Do not reuse split pin.**
- **After installing split pin, spread the pin apart to prevent it from falling out which could lead to the propeller coming off during operation.**

A worn-out or bent propeller will lower the motor's performance, and cause engine trouble.

1. Put a piece of wood block between propeller blade and anti-ventilation plate to hold propeller.

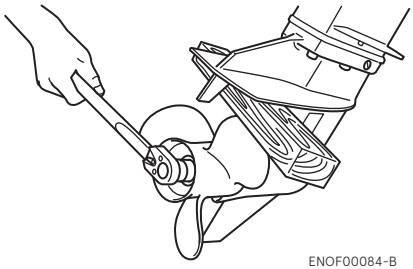

ENOF00084-B

2. Remove the split pin, propeller nut and washer.
3. Remove the propeller and thrust holder.
4. Apply water proof grease to the propeller shaft before installing a new propeller.
5. Install the thrust holder, propeller, stopper, washer and propeller nut onto the shaft.

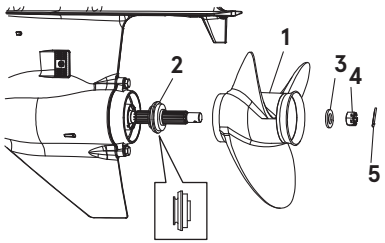

ENOF00084-C

1. Propeller
2. Thrust holder
3. Washer
4. Propeller nut
5. Split pin

6. Tighten the propeller nut to specified torque, and align one of grooves to propeller shaft hole.

Propeller nut torque:

12 N·m (9 ft·lb, 1.2kgf·m)

7. Install a new split pin into the nut hole and bend it.

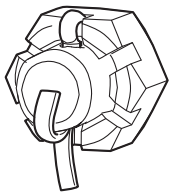

ENOF00084-E

ENOW00086-0

⚠ CAUTION

- **Do not install propeller without thrust holder, or propeller boss could be damaged.**
- **Do not reuse split pin.**
- **After installing split pin, spread the pin apart to prevent it from falling out which could lead to the propeller coming off during operation.**

ENOM00087-A

Spark plugs replacement

ENOW00087-0

⚠ WARNING

- **Do not reuse spark plug with damaged insulation, or sparks can leak through crack, potentially leading to electric shock, explosion and/or fire.**
- **Do not touch spark plugs immediately after stopping engine as they will be hot and could cause severe burns if touched. Allow motor to cool down first.**

ENOW00929-0

⚠ CAUTION

Use only the recommended spark plugs. Spark plugs which have an different heat range may cause engine damage.

If the spark plug(s) is fouled, has carbon build up, or is worn, it should be replaced.

When reusing spark plugs, remove dirt from the electrodes and adjust spark gap to specification.

1. Stop the engine.
2. Remove the top cowl.
3. Remove the spark plug caps.

4. Remove the spark plugs by turning it counter-clockwise, using a 5/8" (16 mm) socket wrench and handle that is provided in tool bag.
5. Inspect the spark plug. Replace the spark plug if the electrodes are worn or if the insulators are cracked or chipped.
6. Measure the spark plug electrode gap with a wire type feeler gauge. The gap should be 0.8-0.9 mm (0.031-0.035 inches). If the gap is different, replace the spark plug with a new one

Use spark plug NGK DCPR-6E.

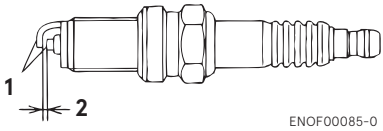

1. Electrode
2. Spark gap (0.8–0.9 mm, 0.031–0.035 in)

7. Install the spark plug by hand and turn it carefully to avoid cross-threading.
8. Tighten the spark plug to the specified torque.

ENON00028-0
Note

- **Spark plug torque:**
  18.0 N·m (13.3 ft·lb) [1.84 kgf·m]

If a torque-wrench is not available when you are fitting a spark plug, a good estimate of the correct torque is 1/4 to 1/2 a turn past finger-tight. Have the spark plug adjusted to the correct torque as soon as possible with a torque-wrench.

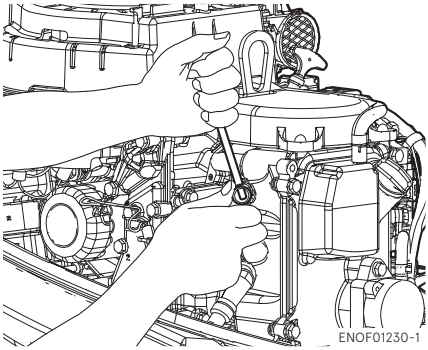

ENOM00088-A

Anode replacement

A sacrificial anode protects the outboard motor from electrolytic corrosion. Anode is located on the gear case, cylinder etc.. When the anode is eroded more than 1/3 of original size, replace it.

ENON00029-A

Notes

- Never grease or paint the anode.
- At each inspection re-tighten the anode attaching bolt. As it is likely to be subjected to electrolytic corrosion.
- Because the anti-corrosion effect decreases, be sure to correctly install the anode and each ground lead to be connected to the bracket when the anode is replaced.

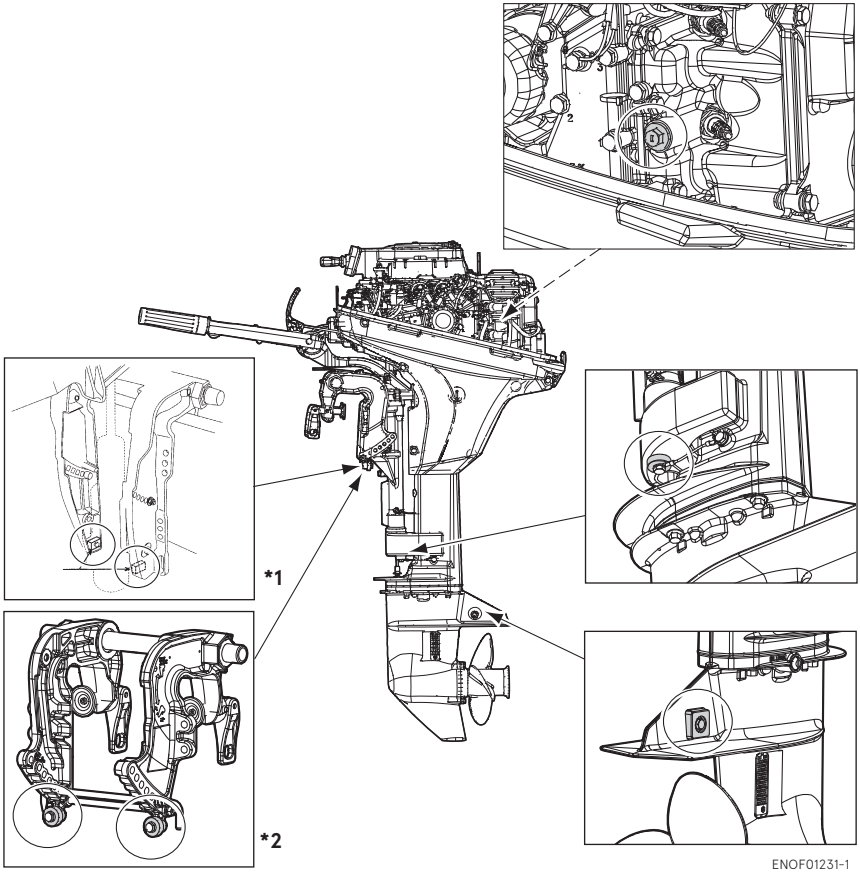

ENOF01231-1

*1 : PTT model
*2 : Manual tilt model

ENOM00089-B

Power Tilt oil checking

ENOW00088-0

⚠ WARNING

- **Be sure that outboard motor is secured to transom or service stand, or accidental drop or fall of outboard motor could lead to severe personal injury.**
- **Be sure to lock outboard motor if it is tilted up, or accidental fall of outboard motor could lead to severe personal injury.**
- **Do not go under outboard motor tilted up and locked, or accidental fall of outboard motor could lead to severe personal injury.**

ENOW00089-A

⚠ CAUTION

Do not unscrew the oil cap with the outboard motor tilted down. Pressurized oil in the oil tank may spurt out.

Check the oil level in the reservoir tank while the tank is kept in a vertical position.

1. Tilt the outboard motor up and lock the tilt with the tilt stopper.
2. Remove the oil cap by turning counter clockwise, then check if the oil level reaches the bottom line of the plug hole.

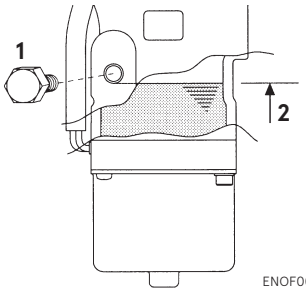

ENOF00558-0

1. Oil cap
2. Oil level

Recommended oil

Use an automatic transmission fluid or equivalent.

Recommended oils are as shown below.

ATF Dexron III

Air purging from the Power Trim and Tilt unit.

Entrapped air in the Power Tilt unit will cause poor tilting movement and increased noise.

1. With the outboard motor mounted on the boat, set the manual release valve to the Manual side, and tilt the outboard motor manually up/down 5-6 times while checking the oil level.
2. When done, close the valve by turning it clockwise towards the Power side.

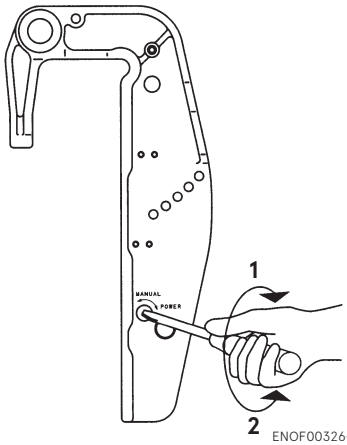

ENOF00326-0

1. POWER
2. MANUAL

ENOM00960-0

Grease point

Apply water proof grease to the parts shown below.

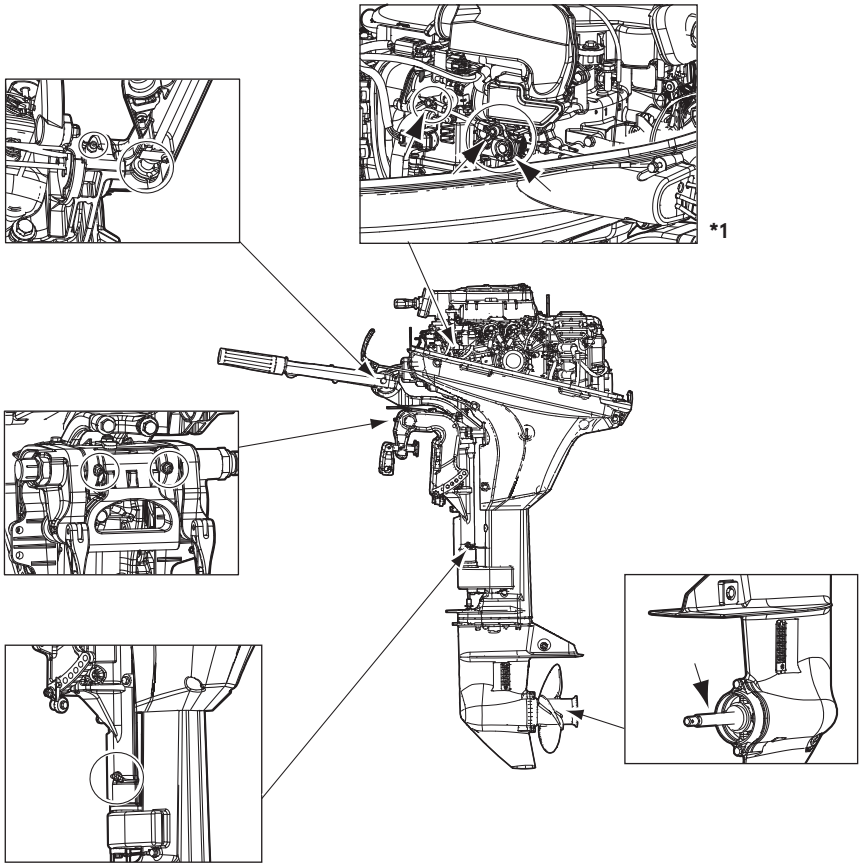

ENOF01232-1

*1 : Other side.

ENOM00100-A

3. Off-season storage

ENOW00934-0

⚠ WARNING

- **Be sure to disconnect fuel connector except when operating engine.**
- **Fuel leakage is a fire or explosion hazard, which can cause serious injury or death.**

ENOW00097-0

⚠ WARNING

Be sure to use cloth to remove fuel remaining in the cowl and dispose of it in accordance with local fire prevention and environment protection regulations.

ENOW00096-0

⚠ CAUTION

Before servicing the motor for storage:
- **Remove the battery cables.**
- **Remove the spark plug caps from the spark plugs.**
- **Do not run the motor out of the water.**

Before you put your outboard motor in storage, it is a good opportunity to have it serviced and prepared by your dealer.
Be sure to use fuel stabilizer while running the motor before storage. (See page 73)

ENOM00101-B

Engine

1. Wash the engine exterior and flush the cooling water system thoroughly with fresh water. Drain the water completely.
   Wipe off any surface water with an oily rag.
2. Remove the fuel hose from the outboard motor.
3. Drain all fuel from the fuel hoses, fuel pump and vapor separator (See page 73), and clean these parts.
   Keep in mind that if gasoline is kept in the vapor separator for a long time, gum and varnish will develop, causing the float valve to stick, restricting the fuel flow.
4. Remove the spark plugs and put a teaspoon of engine oil or spray storage oil into the combustion chamber through the spark plug holes.
5. Turn the starter motor several turns to lubricate inside the cylinder.

ENOW00930-0

⚠ WARNING

- **Be sure to remove stop switch lock to prevent ignited the spark plugs.**
- **Put a cloth to spark plug hole and wipe up any spilled engine oil, when cranking the outboard motor.**

6. Change the engine oil (See page 61).
7. Change the gear oil in the gear case (See page 65).
8. Apply grease to grease point (See page 71).
9. Stand the outboard motor up vertically in a dry place.

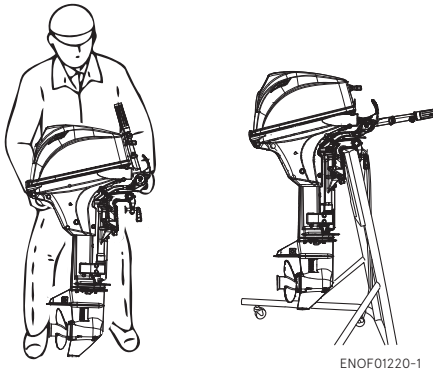

ENOF01220-1

ENOW00066-0

⚠ CAUTION

Do not carry or store outboard motor in any of positions described below.
Otherwise, engine damage or property damage could result from leaking oil.

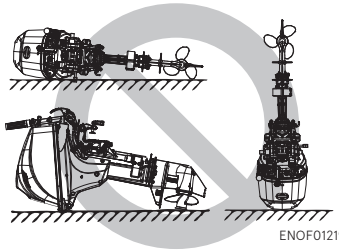

ENOF01219-1

ENON00021-1

Note

- If the outboard motor must be laid down be sure drain the fuel, then the outboard motor on a cushion as shown in the following drawing (See page 73 and page 51).
- Elevate power unit 2 inches to 4 inches if traveling to avoid oil spillage.

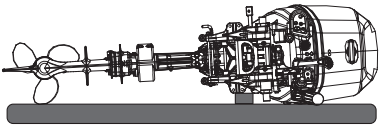

ENOF01221-1

ENOM00950-0

Adding a fuel stabilizer

When adding a fuel stabilizer additive (commercially available), first fill the fuel tank with fresh fuel. If the fuel tank is only partially filled, air in the tank can cause the fuel to deteriorate during storage.

1. Before adding fuel stabilizer additive, drain the vapor separator (See page 73).
2. Follow the instructions on the label when adding the fuel stabilizer additive.
3. After adding the additive, let the outboard motor run in the water for 10 minutes to make sure any old fuel in the fuel system has been completely replaced by the fuel with additive.
4. Turn the engine OFF

ENON00891-0

Note

If your motor is used occasionally, it is recommended to use a good fuel stabilizer in every tank of fuel and keep the container full to reduce condensation and evaporation.

ENOM00970-E

Fuel system draining

ENOW00936-0

⚠ WARNING

For details on handling fuel, contact an authorized dealer.

Fuel and fuel vapors are extremely flammable and can be explosive.

- **If fuel is spilled, wipe it up immediately.**
- **Keep the fuel tank well away from sources of ignition, e.g. sparks or open flames**
- **Perform all work outdoors or in a well ventilated place.**

ENOW00097-0

⚠ WARNING

Be sure to use cloth to remove fuel remaining in the cowl and dispose of it in accordance with local fire prevention and environment protection regulations.

1. Disconnect the fuel hose from the outboard motor.
2. Remove the top cowl.
3. Loosen the screw (3pcs) of the drive shaft housing cover on the port side.

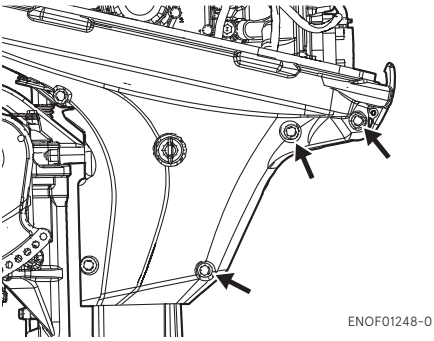

ENON00936-0

Note

To avoid losing the bolts, the loosened bolts cannot be removed.

4. Remove the cowl seal and loosen the screw (4pcs) of the drive shaft housing cover on the starboard side.

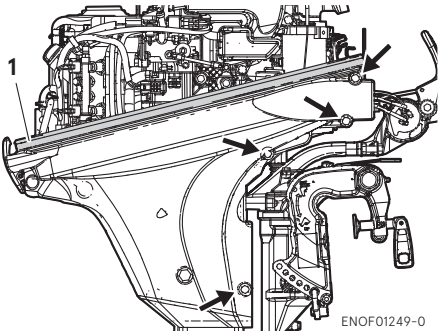

1. Cowl seal

5. Place an approved fuel container under the drain tube end and use a funnel to avoid spilling fuel.
6. Loosen the vapor separator drain screw.
7. When thoroughly drained, retighten the drain screw securely.
8. Check the drained fuel for the presence of water or other contaminants. If either is present, reassemble the outboard motor, refill the vapor separator with fuel, and then drain the fuel again. Repeat this procedure until no water or other contaminants are present in the drained fuel.

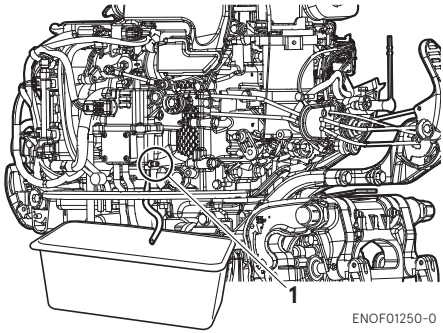

1. Drain screw

ENOM00102-0

Battery

ENOW00931-A

⚠ WARNING

- **Place the battery away from any source of fire, sparks and open flames such as burners or welding equipment.**
- **Place the battery away from fuel tank. Accidental sparks of battery may cause explosion of gasoline.**

1. Disconnect the battery cables and be sure to remove the negative terminal first.
2. Wipe off any chemical deposits, dirt, or grease.

3. Apply grease to the battery terminals.
4. Charge the battery completely before storing it for the winter.
5. Recharge the battery once a month to prevent it from discharging and the electrolyte from deteriorating.
6. Store the battery in a dry place.

ENOM00104-A

4. Pre-season check

The following steps must be taken when first using the engine after off-season storage.

1. Check that the shift and throttle function properly. (Be sure to turn the propeller shaft when checking the shift function or else the shift linkage may be damaged.)
2. Check the electrolyte level, and measure the voltage and specific gravity of the battery.

Specific Gravity at 20°C	Terminal Voltage (V)	Charge Condition
1.120	10.5	Fully discharged
1.160	11.1	1/4 charged
1.210	11.7	1/2 charged
1.250	12	3/4 charged
1.280	13.2	Fully charged

3. Check that the battery is secure and the battery cables are properly installed.
4. Change the engine oil (See page 61).
5. Before starting the engine, disconnect stop switch lock and crank approximately 10 pulling the recoil starter (Manual start model) or 3times of 3sec. turning the starter motor (Electric start model) in order to prime the oil pump.
6. Fill fuel tank completely.
7. Start the engine and warm up the engine for 3 minutes in the "NEUTRAL" position.
8. Run the engine for 5 minutes at the slowest speed.
9. Run the engine for 10 minutes at half throttle. The oil used for storage inside the engine will be circulated out to assure optimum performance.

ENOM00105-A

5. Submerged outboard motor

ENOW00098-0

⚠ CAUTION

Do not attempt to start submerged outboard motor immediately after it is recovered, or engine could be severely damaged.

After taking your outboard motor out of the water, immediately take it to your dealer.

The following are the emergency measures to be taken for a submerged outboard motor, if you can not take it your dealer right away.

1. Wash the outboard motor with fresh water to remove salt or dirt.
2. Remove the engine oil drain screw and completely drain water and oil from the engine.

3. Remove the spark plugs, and completely drain the water from the engine by pulling recoil starter several times.
   Replace oil filter and oil to the correct level.
   The oil and filter may need to be changed again after running a short period to get all moisture completely out of the crankcase.
4. Inject a sufficient amount of engine oil through the spark plug holes.
   Pull the recoil starter several times to circulate the oil throughout the outboard motor.

ENOM00106-A

6. Cold weather precautions

If you moor your boat in cold weather at temperatures below 0°C (32°F), there is the danger of remained water freezing in the cooling water pump, which may damage the pump, impeller, etc. To avoid this problem, submerge the lower half of the outboard motor into the water.

ENOM00107-A

7. Striking underwater object

ENOW00935-0

⚠ CAUTION

Striking the sea bottom or an underwater object may severely damage the outboard motor.

1. Stop the engine immediately.
2. Check the control system, gear case, boat transom etc.
3. Return to the nearest harbor slowly and carefully.
4. Consult a dealer check the outboard motor before operation again.

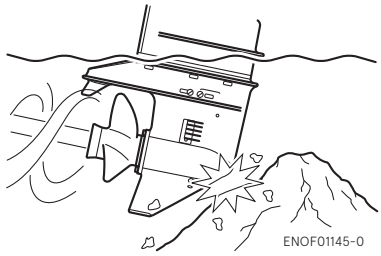

ENOM00120-2

8. Auxiliary outboard motor operation

When the auxiliary outboard motor is not in operation, be sure to remove the stop switch lock, shift into forward, and then tilt the outboard motor up. Otherwise, over-rotation of the propeller due to water spray and water ingestion that could cause damage to the outboard motor.

TROUBLESHOOTING

ENOM00326-0

If you encounter a problem, consult the check list below to determine the cause and to take the proper action.
An authorized dealer will always be happy to provide any assistance and information.

* Low speed ESG operates.

	Engine will not start.	Engine stalls immediately after starting.	Defective idling	Defective acceleration	Engine speed is very high causing high speed ESG to operate.	Engine speed is very low, causing low speed ESG to operate.	Boat cannot run at high speed.	Engine overheats.	Battery is not charged.	Starter motor will not operate.	Power tilt will not operate.	Warning lamp is lit.	Warning lamp blinks.	Possible cause
Fuel and Lubrication Systems	○	○												Fuel level is low in the tank.
	○	○	○	○		○	○	○						Fuel system connection is incomplete.
	○	○	○	○		○	○	○						Fuel system sucks air.
	○	○	○	○		○	○	○						Fuel pipe is twisted.
	○	○	○	○		○	○	○						Cap vent is closed.
	○	○	○	○		○	○	○						Fuel filter, fuel pump or injector is clogged.
	○		○	○			○	○						Low quality gasoline is used.
	○													Primer bulb is clogged.
	○	○	○	○		○	○	○						Fuel feed pump (FFP) malfunctions or is clogged.
						○*							○*	Water temperature sensor or MAP (Manifold Pressure) sensor is defective or the sensor circuit is disconnected.
			○	○		○	○	○						Low quality engine oil is used.
			○	○										Engine oil quantity excessive (Exhaust smoke is generated.)
						○*		○				○*		Engine oil is lacking (Oil pressure switch operates).
						○*		○				○*		Oil filter is clogged (Oil pressure switch operates).
						○*		○				○*		Oil pump is defective (Oil pressure switch operates).
Electrical System	○	○	○	○		○	○	○						Use of spark plugs not specified.
	○	○	○	○		○	○							Spark plug is contaminated.
	○	○	○	○		○	○							No sparks or weak spark.
	○													Stop switch short-circuited.
	○													Stop switch lock is not put.
	○								○	○	○			Defective wiring, ground, wire disconnected or loosened.
	○								○	○	○			Battery charging is defective, or rectifier malfunctions.
	Cel l (O)								○	○	○			Battery is dead, connection is loose or corroded. Battery electrolyte level is low.
	○								○	○	○			20A fuse is blown.
	○									○				Shift lever neutral (N) position is not proper.
	○									○	○			Start switch or main switch is defective.
	○									○				Starter motor or starter solenoid operation is defective.
											○			PTT switch or solenoid is defective.
											○			Air is mixed in PTT fluid.

	Engine will not start.	Engine stalls immediately after starting.	Defective idling	Defective acceleration	Engine speed is very high causing high speed ESG to operate.	Engine speed is very low, causing low speed ESG to operate.	Boat cannot run at high speed.	Engine overheats.	Battery is not charged.	Starter motor will not operate.	Power tilt will not operate.	Warning lamp is lit.	Warning lamp blinks.	Possible cause
Compression System	○	○	○	○			○							Valve timing is not correct (Belt is stretched or installed incorrectly).
	○	○	○	○			○							Valve clearance is defective.
	○	○	○	○			○							Valve seat sealing is defective.
	○	○	○	○			○							Piston, piston ring and/or cylinder is worn excessively.
			○					○						Combustion chamber car deposition is too much.
			○	○			○	○						Spark plug is loose.
Others			○			○*	○	○				○*		(Cooling water is lacking.) Pump is defective or clogged.
						○*	○	○				○*		Thermostat operation is defective.
				○	○		○	○				○		Anti-cavitation plate is damaged.
				○	○	○	○	○				○		Use of mismatched propeller.
			○	○	○	○	○	○				○		Propeller is damaged or deformed.
				○	○		○	○				○		Thrust rod position is not correct.
				○	○	○	○	○				○		Boat is unbalanced by load position.
				○	○	○	○	○				○		Transom installation height is too high or too low.
				○		○	○							Throttle link adjustment is defective.

ACCESSORIES KIT

ENOM00327-0

The following a list of the tools and spare parts provided with the motor.

Items		Quantity	Remark
Service tools	Tool bag	1	
	Pliers	1	
	Socket wrench	1	10 × 13 mm
	Socket wrench	1	16 mm
	Socket wrench handle	1	
	Screwdrivers	1	Cross-and straight-point
	Screwdriver handle	1	
Spare parts	Emergency starter rope	1	
	Spark plug	1	NGK DCPR6E
	Split pin	1	
	Stop switch lock	1	
Parts Packaged with Engine	Fuel tank	1	12 L
	Primer bulb	1 set	
	Remote control box	1 set	for EP and EPT
	Remote control attachment	1 set	for EP and EPT
	Drag link	1	for EP and EPT
	Bracket fixing		
	Bolt	4	8 mm] EPT/EFT only
	Nut	4	8 mm] EPT/EFT only
	Washer	8	8 mm] EPT/EFT only
	Hose joint	1	For flushing

PROPELLER TABLE

ENOM00329-0

Use a genuine propeller.

A propeller must be selected so that the engine rpm measured at wide open throttle while cruising is within the recommended range.

5400–6100 min^{-1} (rpm)

	Propeller Mark	Propeller Size (Blades × diameter × pitch)	
		in.	mm
Light boats	11.5	3 × 9.25 × 11.5	3 × 235 × 292
	10	3 × 9.25 × 10	3 × 235 × 254
	9	3 × 9.25 × 9	3 × 235 × 229
	8	3 × 9.25 × 8	3 × 235 × 203
	7	3 × 9.2 × 6.9	3 × 234 × 174
	6	3 × 9.2 × 6.1	3 × 234 × 155
Heavy boats	7	4 × 10 × 4	4 × 254 × 178

klimasklep
www.klimasklep.pl (91) 432-43-42 sklep@klimasklep.pl
klimasklep
www.klimasklep.pl (91) 432-43-42 sklep@klimasklep.pl
klimasklep
www.klimasklep.pl (91) 432-43-42 sklep@klimasklep.pl

KLIMASKLEP
ul. Orzechowa 3
72-010 Przęsocin (koło Szczecina)

tel.: **(91) 432-43-42**

e-mail: **kontakt@klimasklep.pl**
www: **www.KlimaSklep.pl**